Google

This is a digital copy of a book that was preserved for generations on library shelves before it was carefully scanned by Google as part of a project to make the world's books discoverable online.

It has survived long enough for the copyright to expire and the book to enter the public domain. A public domain book is one that was never subject to copyright or whose legal copyright term has expired. Whether a book is in the public domain may vary country to country. Public domain books are our gateways to the past, representing a wealth of history, culture and knowledge that's often difficult to discover.

Marks, notations and other marginalia present in the original volume will appear in this file - a reminder of this book's long journey from the publisher to a library and finally to you.

Usage guidelines

Google is proud to partner with libraries to digitize public domain materials and make them widely accessible. Public domain books belong to the public and we are merely their custodians. Nevertheless, this work is expensive, so in order to keep providing this resource, we have taken steps to prevent abuse by commercial parties, including placing technical restrictions on automated querying.

We also ask that you:

+ *Make non-commercial use of the files* We designed Google Book Search for use by individuals, and we request that you use these files for personal, non-commercial purposes.

+ *Refrain from automated querying* Do not send automated queries of any sort to Google's system: If you are conducting research on machine translation, optical character recognition or other areas where access to a large amount of text is helpful, please contact us. We encourage the use of public domain materials for these purposes and may be able to help.

+ *Maintain attribution* The Google "watermark" you see on each file is essential for informing people about this project and helping them find additional materials through Google Book Search. Please do not remove it.

+ *Keep it legal* Whatever your use, remember that you are responsible for ensuring that what you are doing is legal. Do not assume that just because we believe a book is in the public domain for users in the United States, that the work is also in the public domain for users in other countries. Whether a book is still in copyright varies from country to country, and we can't offer guidance on whether any specific use of any specific book is allowed. Please do not assume that a book's appearance in Google Book Search means it can be used in any manner anywhere in the world. Copyright infringement liability can be quite severe.

About Google Book Search

Google's mission is to organize the world's information and to make it universally accessible and useful. Google Book Search helps readers discover the world's books while helping authors and publishers reach new audiences. You can search through the full text of this book on the web at http://books.google.com/

THE GIFT OF
MRS. RUSSEL KABELIN

LIBRARY

LIBRARY

OPERATING TRAINS

THIS VOLUME TREATS OF THE UTILIZATION OF MEN AND EQUIPMENT THE ORGANIZATION OF TRAINS, THE FORCES OPERATING THEM, THEIR HEATING AND LIGHTING, AND THE SIGNALS AND RULES AND REGULATIONS GOVERNING THEIR MOVEMENT INCLUDING EXAMINATIONS, (QUESTIONS AND ANSWERS) FOR CONDUCTORS, ENGINEERS, FIREMEN, SIGNALMEN, TRAIN DISPATCHERS, YARDMASTERS AND SWITCHMEN, AGENTS AND OPERATORS, BRAKEMEN AND BAGGAGEMEN AND TRACK, BRIDGE AND BUILDING FOREMEN.

FORMING ONE OF THE SERIES OF THE VOLUMES COMPRISED IN THE REVISED AND ENLARGED EDITION OF

THE SCIENCE OF RAILWAYS

BY

MARSHALL M. KIRKMAN

EDITION 1913

CHICAGO
CROPLEY PHILLIPS COMPANY
1913

Transportation
Library
TF
7
.K59
1907
v.9

COPYRIGHT BY

CROPLEY PHILLIPS COMPANY

1913

Also Entered at Stationers' Hall, London, England.

All Rights Reserved.

TABLE OF CONTENTS.

			PAGE
Introduction			v
Chapter	I	Economic Aspects of the Subject	7
Chapter	II	Morale of the Service	12
Chapter	III	The Train Force	32
Chapter	IV	The Physical and Educational Requirements of the Train Service	56
Chapter	V	Hygiene	79
Chapter	VI	Regulation of Trains	82
Chapter	VII	Expediting the Movement of Trains	92
Chapter	VIII	Accidents: Their Kinds and Causes, Legislation in Regard Thereto; Instructions, Including First Aid to Injured	108
Chapter	IX	Safety Appliances and Their Practical Uses	129
Chapter	X	Heating Cars	152
Chapter	XI	Lighting Cars	216
Chapter	XII	Signals	268
Chapter	XIII	Track Signals	334
Chapter	XIV	Growth and Value of Train Rules	343

TABLE OF CONTENTS.

			PAGE
Chapter	XV	Train Phraseology	355
Chapter	XVI	Duties of Employes in Relation to Train Service. General Rules Governing Telegraph and Telephone Operators, Line Repairers, Yardmasters, Passenger Conductors, Train Baggagemen, Passenger Trainmen, Freight Conductors, Freight Brakemen, Enginehouse Foremen, Supervisors of Signals, Signal Repairmen.....	366
Chapter	XVII	Examinations (Questions and Answers) for Conductors, Enginemen, Firemen, Signalmen at Interlocking Plants, Train Dispatchers, Agents and Operators, Brakemen and Baggagemen, and Track, Bridge and Building Foremen	391
Chapter	XVIII	Movement of Trains by Telephone.....	498
Chapter	XIX	The Standard Code of Rules and Regulations Governing the Movement of Trains—Single, Double and Three and Four Tracks —Hand, Flag and Lamp Signals and Train Signals	501
Chapter	XX	The Standard Code of Rules and Regulations Governing the Movement of Trains—Block Systems	564
Chapter	XXI	The Standard Code of Rules and Regulations Governing the Movement of Trains—Interlocking, Air Brake and Train Air Signal Rules	586
Index			597

INTRODUCTION.

While the physical life of a railway is too great to be comprehended in its entirety by any man, a general knowledge of the operations of railroads and the economic laws that govern them is essential to every railroad man, whether he be prominent in his line of duty or not. It is as necessary, in many respects, to Train Men as to Managers. Many men, eager to acquire this information, do not have the facilities because no one except the very highest officials of a railroad possesses them. This book, with the others that make up "THE SCIENCE OF RAILWAYS," is especially intended to aid those who seek to acquire knowledge of the operations of railroads in the many departments of the service, yet have no practical opportunity of doing so.

When we speak of a railroad we conjure up in our minds the right of way and track of steel winding away through the green fields and pastures of the country. As a matter of fact, these are only the foundations or mechanical features

of the railroad, so to speak. The spirit or vital flame of the enterprise is the engines and cars that traverse the country, controlled and directed by the skilled and trusted men in charge thereof.

The Train Service of a railroad is its supreme feature. Roadways existed before locomotives were invented, but they had no general interest to mankind. The locomotive vitalized them. It is the trains that rush and roar through the land, loaded with the world's traffic, which make railroads interesting to the public and useful to mankind. The subject is a great one, the greatest, in fact, of all those connected with railroads.

CHAPTER I.

ECONOMIC ASPECTS OF THE SUBJECT.

The denizens of the different countries of Western Europe do not have the same habits nor the same likes and dislikes, and yet the men and women are everywhere practically the same. Their differences are the outgrowth of local causes, and wholly superficial. Thus the French descendants of a German family hate the mother country with all the intensity of the original Gaul. National lines will fade away when those who live on either side of them come to know each other familiarly. Steam and electricity make a common family possible. Social unity and trade progress are dependent upon intercommunication. The present rate of progress in this respect, compared to the past, is as the present rate of speed is to that of the stage coach and sailing vessel of an earlier age.

It is the province of railroads to overcome distance, to bring peoples together, to make markets accessible. The more cheaply, rapidly and safely trains are run, the greater the traffic, the greater the intercommunication. Every train is a factor in the evolution of mankind and has

a direct effect on the relations of peoples and the growth of trade. Its movements thus become a matter of universal concern.

The fundamental conditions governing the service are that trains shall be ample, regular in their movements and adapted to the traffic they handle. That they shall be safe so far as careful foresight and experienced men can make them goes without saying.

The business of railroads is governed by the divergent interests of those who use them. Their government is founded on well known economic laws designed to accommodate a traffic regulated by such laws. It is self-adjustive and harmonizes perfectly with surrounding interests. Its methods are such as to protect and foster the community upon which railroads are dependent. They are based on natural laws and are the outgrowth of mutual concessions and a careful apportionment of interest. Statutory laws, on the other hand, such as those regulating rates, speed of trains and kindred details, are not thus self-responsive, and in so far as this is the case, bear oppressively while they seem, perhaps, for the moment to benefit mankind.

The physical life of a railway, as I have remarked in the introduction, is too great to be comprehended in its entirety by any man. But a good general knowledge of the operations of railroads and the economic laws that regulate them is essential to every student and to every railroad man, whether he be prominent in his vocation or not. Men connected with railroads,

eager to acquire this information, do not, as a rule, possess the facilities. Only the very high officials of railroads come in direct contact with every phase of railway operations. This book is intended to facilitate the inquiries of those who do not possess such avenues of information. It treats of the organization, duties and responsibility of the train force, the movement of trains, the rules and regulations governing the service, the accidents incident to railway operations, signals and kindred subjects.

It is devoted particularly to the physical operations of trains and the rules and regulations that may profitably be used in that particular field. It is not exhaustive, and a full understanding of the subject requires that collateral branches of the service should be mastered. The boundaries of the different departments and bureaus of railways have, as railway men are aware, no well defined line of demarkation, but merge insensibly at many points into those about them. Thus the operating and traffic departments include within their scope many of the self- same things. Hence it is necessary to understand generally, at least, all branches of railways in order to comprehend a particular one.

I have in the past written several books on train service. The first one was published in 1878. There, for the first time, was pointed out the incongruities of the service noticeable at that time.

The volume in question embraced a complete code of train rules and signals. It suggested for

the first time the necessity of concerted and harmonious action between different railroads. Every important suggestion it contained, and the great bulk of the regulations it embodied, have since been carried out.

Of the forces which have accelerated the development of the world, the railway has been the greatest, but its progress has been so rapid, and its achievements so great, that a dispassionate study of the economic laws governing it has been well nigh impossible.

In the operation of trains, comparisons are, in the main, valueless between different railroads because the conditions are never alike. They are, therefore, not attempted herein. The train service of American railroads may be said to be perfect according to the facilities that the traffic renders feasible. Nevertheless, owners and managers have been much criticised in this respect, but without cause. The service is at once ample and safe, and, at the same time, the cheapest and most extended in the world. Its triumphs, too, have been achieved in the face of apparently insurmountable obstacles; the obstacles that a new and widely extended country offer; a country without credit, wherein money was scarce, labor high priced, material costly, taxes excessive and public opinion oftentimes unjust and oppressive.

Information in regard to the trains of railways is always of interest and importance. Their producing capacity is determined by statistics compiled with that object in view. These exhibits

portray the income and the outgo. Thus the value of a traffic is determined, while the service performed by engines and crews of trains, and their relative effectiveness, is, incidentally, ascertained. The last is of the utmost importance, as upon the skill and economy exercised depend the profitableness of a service. This applies to both freight and passenger trains. In describing one we, therefore, describe both.

CHAPTER II.

MORALE OF THE SERVICE.

The train and station force of a railroad is its creative force — the means by which it accomplishes its ends. Here is the place for those who contemplate making the railway business an occupation to begin work. At the station, or on the train, the traffic, upon which everything hinges, is handled. Having learned the business in this primary school, the application of general principles will come more easily to the student afterward, should he be promoted to higher duties.

In corporate life, promotion is necessarily slow. It must be so wherever large bodies of men are associated. The struggle for supremacy is unremitting and merciless. The fittest survive. The work is oftentimes hard and the hours long. Moreover, men laboring thus in obscurity are apt oftentimes to think themselves overlooked or forgotten, and, thinking thus, they lose heart and quit the service, or seek employment elsewhere. It is not such who achieve success upon railroads; preferment here demands perseverance, patience, courage, hard, unremitting labor of body and mind.

Not only does the train service of a railroad intertwine its functions with those of every department and bureau of the service, but it takes on new color with the introduction of each new device and with every added employe. These conditions, never alike for two successive days, render any attempt to portray it in permanent colors futile.

A description that might represent one road would be untrustworthy if applied to another, and a description that embraced every detail to-day would be imperfect to-morrow. The duties of those in charge of trains of the same class seem, to the casual observer, to be identical, yet the greatest diversity exists because of differences in the character of the business handled and the rights trains enjoy. Nothing would be gained by an attempt to describe or analyze these differences. Some of them are apparent upon reflection. Others, again, are too subtle to be conveyed by written or verbal description. Nevertheless, certain general conditions attach to the service of all railroads. These may be depicted and profitably studied.

The train force of railroads must be composed of temperate men (I do not say total abstinence men), otherwise their habits will lead them into excesses that will sooner or later end in disaster.

The fund of practical information of a local nature that trainmen must possess to make them valuable to their employer I cannot pretend to set down in words, but in general I may say that they must be familiar with the route over which

they pass, the sidings, stations, grades, crossings and other physical features of the line; with the signals of the company; with the rules governing the movements of its trains, and finally with the disposition of auxiliary forces.

It is no exaggeration to say that trainmen are, in general and in particular, comprehensive, sagacious and worldly wise. They are required not only to obey specific rules, but to take cognizance of other necessary things not embraced therein. All these varied and complex requirements they meet.

Trainmen upon many lines are required to be familiar with methods of operating both single and double track, so that no risk may be run in transferring from one to the other.

In the discharge of their duties they must obey established rules without reference to their value in particular instances, for to transgress them in unimportant cases is to incur the habit of disobedience in important instances. Upon them rests the responsibility of seeing that every appliance necessary to protect a train is in order before it starts; brakes must be in perfect condition, signals in their places, and in the event of detention on the line prompt and adequate measures taken to protect the train. They must, it appears, be not only experts, but men of calm judgment and quick decision.

The train service is peculiar and is characteristic of railways. Other branches of the service must find their counterparts in commercial pursuits of various kinds, but not so the train service.

It receives the unstinted admiration of us all; of travelers as well as others. Its service in the early days of railroads was in the main recruited from among the hardy, adventurous boys of cities and towns. Its hardships and dangers appalled all but the more daring. No favorite son, no heir apparent, was allowed to brave the dangers that attended service on freight trains or about the yards and stations. Other and less dangerous avenues to fortune were sought for the delicately nurtured. It was only those whose lines had fallen in hard places, who were restricted in the pursuits they might follow, and who were courageous beyond their associates, who voluntarily risked the chances. However, the dangers of the service, while real and appalling, were soon robbed of their terror by daily familiarity and the feeling so common to soldiers and men in venturesome pursuits, that while others might be unfortunate they would escape.

All these risks, or at least many of them, are extinguished, or in process of extinguishment, by the introduction of automatic couplings and other devices intended to rob the train service of railroads of its more dangerous features. The introduction of automatic signals, brakes, switches, couplers, and kindred mechanical devices, will bring into the train service men who would otherwise have avoided it. This will benefit everyone. It is probable, also, that the introduction of improved devices, such as I have mentioned, will effect a marked change, if not a revolution, in other important par-

ticulars connected with the personnel of the service.

In every trainman we see a possible railway manager or president. The train and station service is the gateway to a knowledge of railway operation. It is also the natural recruiting ground for officers and sub-officials, and constitutes what the merchant marine was to the navy before the introduction of steam—a preparatory school.

Few appreciate the varied responsibilities that rest upon conductors and engineers, and in a lesser degree on other trainmen. They are so great as to affect in a marked manner the character of these officials. It is not too much to say that they sober and ennoble them. No matter how indifferent they may have been to the grave responsibilities of life before their appointment, once life and property are placed in their keeping their demeanor becomes that of men who appreciate the responsibility and strive to fit themselves to meet it fully.

Men whose lives often hang in the balance, or upon whose courage, vigilance, skill and presence of mind the lives and property of others depend, will, in the end, have little that is trivial or superficial in their natures. Those who are unable to appreciate the greatness of the responsibility and its requirements do not long continue in the train service, but quickly seek other and less difficult positions in life.

The difference between the freight and passenger train business is great, and quickly impresses

itself upon those promoted to the latter service. The facility with which they adapt themselves to the new conditions generally evinces the fitness of the selection. The transition is, however, in every case expected and so finds the incumbent in a measure prepared. But notwithstanding this, the change is so marked that only those who possess great adaptability can adjust themselves to it without more or less friction. The simplification of the service that is going on all the time will in a measure lessen the obstacles to be overcome. It at the same time secures greater unity in the service. These advantages no one appreciates so highly as those immediately connected with the movement of trains.

The duties of trainmen in America differ materially from those of other countries, being at once more varied, more arduous and more responsible. This is especially true of the passenger service. Its members in America come in constant contact with the patrons of their employer, and hence must cultivate the art of getting along pleasantly with the traveling public. They study, and successfully, the art of satisfying the patron without sacrificing the carrier. Their mechanical duties may be learned by practice and observation, but ability to get on pleasantly with the public can only be acquired by the exercise of an enlightened understanding and a cheerful and kindly disposition, which latter, as has been aptly said, forms the basis of all true politeness.

The train force is highly drilled. It is at once expert, prompt, active and trustworthy. It

thinks and acts quickly, as hesitation may precipitate disaster involving both life and property. No government will knowingly license a dull man as pilot; the risk would be too great, and at once an unkindness to the man and a wrong to the public. The same conditions apply to the train force of railroads. A dull man in its ranks is a constant menace. A man upon whose action interests so vital rest must possess quick perception, good judgment and a resolute will.

The vicissitudes attending the operations of trains cannot always be anticipated, so that occasions constantly arise where those in charge must act on the spur of the moment. They must, therefore, be men qualified to assume such responsibilities. The fitness of men to fill positions in the train service is in the main determined by long observation of their acts by official superiors. The surveillance is not offensive, however. The rudimentary needs of the service require that a man shall know how to read and write, have good hearing and good eyesight.* The custom of requiring men seeking positions in the train service to pass an examination seems to be a growing practice all over the world. Such examinations may not always be agreeable, but their usefulness is coming to be generally recognized. They may, indeed, be the means of protecting the life of the person examined and,

* The prevalence of color blindness is well known, but according to Dr. Robert Barclay, a railway surgeon of experience, "profound deafness among railway employes is by no means rare. It is usually developed insidiously, and is unrecognized unless brought to notice through some aggravating circumstance."

without them, many defects would remain unknown until, perhaps, revealed by some grave disaster. While examinations are desirable, it is also true that they may be carried to absurd lengths. What is required, primarily, is that the employe should know the rules governing his particular duties, be able to read and write, have good hearing, perfect eyesight, reasonably stable health, and a courageous spirit.

It is important that the members of a train force should not be worked to the point of exhaustion. Due time for rest, sleep and recreation must be allowed. To deny this is to invite carelessness, inattention and indifference; to court disaster, in fact. Flesh and blood will not withstand undue strain. As a rule, trainmen are not overworked, and instances to the contrary are exceptional and, as a rule, unavoidable.

The practice requiring trainmen to wear uniforms is a growing one. It was objected to at first by employes in America on the ground of cost, conspicuity and the necessity of frequent changes of garments not alike in texture or warmth. However, upon trial, these objections proved not to be well founded and so only stayed without preventing the adoption of the practice. The innovation was on the whole a good one and in the interest of trainmen. Men in the service are governed with the strict discipline of military life. To receive an order is to obey it. The uniform helps to emphasize this. Every trainman must be the equal of the soldier in courage and disposition. His duties are on the

whole more dangerous than those of a soldier and the many mishaps that attend his career enlist general sympathy. They also suggest that permanent provision so far as possible should be made for him when he can no longer work.

The practices that characterize the train service of different companies are not the same. Thus upon many lines the system more or less generally designated as "first in, first out," is observed. Upon other roads crews are assigned arbitrarily to particular trains. An objection to what is known as the "first in, first out," method is that it breaks up the habits of men and prevents their eating, drinking and sleeping in a methodical, orderly way like the rest of mankind. Moreover, it is urged against it that it injures the service in this that it treats all alike without reference to capacity, length of service or faithfulness. If there is no promotion ahead, if there is not something to strive for continually, men lose interest, say these critics. However, the practice does not have an injurious effect where it has been tried, and therefore, criticisms upon it are to be accepted qualifiedly. Those who favor the method claim that it equalizes the pay of trainmen and in general prevents favoritism. Operating officers favor it for the same reason. They find it lessens complaints and enables the management to secure desired safeguards and also make comparisons otherwise impossible. An advocate describing its working says that the number of engine crews assigned to a particular district, should be in excess of the number of

engines. The first crew in should be the first crew out without reference to the engine to which it is assigned, engines being assigned to meet the needs of traffic irrespective of any rule regarding particular crews. The plan is to keep the engines in constant service, barring necessary repairs, and at all times to have them manned with crews that have had opportunity to secure rest. The number of engines and crews should be so regulated that the engines in actual service will be worked to their full capacity. Those not needed, to be laid up. The number of crews assigned should be such that they will have ample rest before going on the road, and also earn uniform pay. The system affords sufficient flexibility to cover any range of business. The arguments in favor of it are many. A man assigned permanently to a particular engine is interested more or less, it is claimed, in keeping his machine out of the shop, and hence in working it as lightly as possible. Men who pool their efforts, on the contrary, are willing to work the engines hard and haul heavy trains. A saving is thus effected. Engines are built for service and the sooner an engine is worn out in hard work, the more money it will have earned. Under the system of assigning crews to engines according to the plan "first in, first out," every engine is available. When a particular crew is assigned to a particular engine, the latter will often be taken out by the engineer when it ought to be sent to the repair shop, and hence will not perform full service. Under the practice of assign-

ing crews to engines on the principle of "first in, first out," it is possible to get greater mileage out of engines than under the regular crew system; a given amount of work can be done with much fewer engines; engines will be made to haul heavier trains. Cost of repairs and service per mile will thus show better. Finally the advantages of the system are mutual as between the railroad and the enginemen. In arranging the work a sufficient number of crews should be assigned to insure every man an opportunity to get proper rest between trips. The number will have to be readjusted from time to time to meet fluctuations in business. This elasticity adapts the system perfectly to the varying needs of business. Engineers and firemen should be assigned together and kept together. In some instances where this has not been done, results have not been satisfactory. Those who favor the interchange of crews on engines claim that engines are thus kept constantly in service while in good condition, rendering it possible, if there is a surplus, to lay such surplus by and put it in good order against the day when it will be needed. Or, if there is no surplus, then the maximum service possible is secured by running every engine to its full capacity. The practice of sending out engine crews in the order of their arrival irrespective of the engines they work, is also enforced more or less by many railroad companies with conductors and brakemen. It is claimed that under this system wages are more nearly equalized than under any other, and

consequently it is more popular than any other with those it affects.

Methods designed to improve the service of railways in general affect favorably the train service. The particular requirements of the latter are implicit obedience, constant watchfulness, energetic prosecution of work, economy of time. Judicious selection of the members of the train force is recommended, followed afterward by careful schooling and proper discipline, the last named tempered at all times by good judgment.

A belief that the interests of employer and employe are in the main identical each day grows in strength among railway men. Those connected with the train service are no exception to the rule. Railway managers seek to cement this feeling by careful consideration of the present and future interests of employes and by leading them to regard at all times the permanent prosperity of the company as a part of their being and as a matter in which they and theirs are vitally concerned.

While the practice of giving prizes and bounties for superior efficiency is not general, it is practiced more or less by every company in one way or another. Whatever shape it may take, its purpose is to build up the morale of the organization and to foster friendly relations between the employer and the employe. Aside from this, however, it is a proper recognition of superior services and worthy of all praise.

In the operation of railroads, while rewards may be proper, fines for dereliction of duty are not proper and should be avoided. Men should be encouraged with praise, but threats should be avoided; the worthy should be promoted, but the unworthy should not be degraded; unremitting vigilance should be suitably noticed, but mistakes not the result of carelessness or indifference should be overlooked; errors of judgment should be leniently dealt with while disloyalty should be punished with dismissal. A service thus governed must, in the end, be animated by a high respect for itself and a clear conception of its duty to its employer. I do not here speak of the train service particularly. Those who look after the track of railways and its physical appliances are similarly governed. Deficiencies here, as in the train service, are detrimental to the property and add to their injurious effects a loss of prestige.

There is nothing new in the practice of giving rewards for superior efficiency. It is as old as the details of business, or as the disposition of one man to actively interest another in his affairs. In the case of railroads, those, for instance, connected with the Machinery Department, who perform the greatest amount of work with the least amount of material, such as fuel or oil, are thus recognized on some of our roads. Awards or premiums are also granted men in other departments of the service for superior work and interest. Premiums have been found valuable, it is claimed, where the practice has

been tried, in improving the train service. The basis of premiums is not the same in every case, but one I have particularly in mind, at this moment, takes cognizance of the number and weight of cars moved in the train, its delays, accidents, the complaints of the public, the mistakes made, the deportment, dress, condition and cleanliness of the cars, and so on. A sum of money, in addition to regular pay, is awarded the fortunate recipients of the bounty. The conductor of a passenger train, presenting the best personal appearance, who is least complained of and whose train conforms most closely to its schedule and meets with the fewest accidents, and fulfills other desirable requirements, gets a prize and stands high with his company. His brakemen and baggagemen are also favored, for we may be certain that they excel in their positions as he does in his. Like begets like. Similarly, the crews of freight trains are recognized and rewarded for superior efficiency. The records, in addition to furnishing the data upon which prizes are awarded, are also made, as I have intimated, the basis of promotion, a bad record being looked upon as a mark of inferiority, while a good one indicates the reverse. A company encouraging its train force in the way I have mentioned is benefited, say the advocates of the system, in increased number of cars hauled; in accelerated movement of trains; in fewer accidents; in lessened complaints; in decreased payments for overtime; in economical but efficient use of supplies; in quickened interest, and generally in a height-

ened desire to achieve results. The premiums are of little consequence from the employer's point of view, but of great importance to the employe, not only as an evidence of recognition, but because of their intrinsic value.

Where men are scattered over a wide extent of country, incentives such as I have mentioned cannot but be beneficial, but to secure the best results, the recognition must be gracious, prompt and just. It must be the spontaneous act of the employer and indicate a high appreciation of the value of faithful service.

The practice of giving bounties answers a further and desirable purpose, namely, that of dispelling the idea that everyone must be treated alike, without reference to skill and faithfulness. Herein railways, like other corporations, are prone to be weak.

Improvements in railway appliances demand, on the whole, increased intelligence upon the part of those who use them. This involves greater care in the selection of men and greater encouragement to them to perfect themselves in their duties. The engineer of to-day, it is apparent, must be far more skilful than the engineer of sixty years ago, because his appliances are far more numerous and complicated, and, therefore, require greater experience and skill to use them effectively. This is also true, in a measure, of others connected with the train service.

In order to build up the train force to the highest standard of which it is capable, those admitted to it should be selected with the foresight and care

that characterize the selection of the employes of a bank. Two things are to be kept in view, namely, present and future usefulness; ability to do the work in hand, and capacity to grow. These particular features of the service were not considered with the care they should have been in the early days of railroads. Managers were too hurried. Moreover, the material was not at hand to select from. No department of railway service has received the consideration in this respect in the past that it will in the future. Men have necessarily been oftentimes chosen haphazard. Their antecedents have not been scrutinized, and after installation, no systematic effort has been put forth to lead them to study and otherwise fit themselves for their positions.

Applicants seeking to enter the service of railways should be passed upon by men who are experts in their way, and are, moreover, good judges of human nature; men highly interested in building up and ennobling the service. To be connected with the train service of a railway is in itself an evidence of high intelligence and fitness. Each year has shown improvement Each year has developed higher aspirations and greater skill in the performance of duty. The train force presents, all in all, the most important feature of the operating department of a railroad. Mr. J. S. Gadsden, at one time President of the American Association of Railway Superintendents, referring to this phase of railway life in connection with other things appertaining to the service, has this to say: "The

maintenance of proper discipline is as necessary to the proper operation of railroads as it is difficult of application and distasteful to the superintendent called on to exercise it. So long as the necessity exists for the employment of the 'personal equation,' as it is called, in the service of railroads, laws must be framed for its government, and punishment must follow their violation. The problem is to measure the degree of punishment suitable to the offense; to correct the violation of law without doing greater harm to the system. Personal government without fixed rules for guidance will tend either to unusual severity or to harmful lenience. To the superintendent, busied and interested in the daily solution of the ever-changing problems of the hour, the rude shocks to which he is ever liable by the errors or omissions of his men, leading to accidents or disasters, are trials of temper, and so disturbing in their effects upon the nervous system as to quite unfit him, oftentimes, for the exercise of the functions of judge. When contemplating the results of the violation of established laws, which violations often defeat all the provisions which wise foresight had taken for security of life and property, a person of the most equable temper is apt to lose self-control, and resort to measures which would be unjustifiable under the most aggravated instances of disobedience. Improvements in physical structures should and do enlist eager interest and commend themselves to judicious minds; but the ethics of railway management, the maturing

and systematizing of a code of laws for classification and punishment of offenders, so aimed and adjusted as to correct the errors and mistakes of employes without unnecessary friction, is a subject of equal, if not paramount, interest and importance. The theory on which is based the code of discipline presented below is to clearly state the regulations, which are to be enforced by a penalty, and the nature and extent of the penalty; also to place such regulations before those expected to obey them; to follow up every violation promptly, inflicting a penalty for the violation, and not for the consequences of the violation, but only after a fair hearing of the case; and to surround the train rules with greater sanctity than others by treating their violation with greater severity. Further, by increment in the measure of punishment growing with the repetition of offenses, to draw attention to the fact that the offender is gradually but surely working out his dismissal from the service without any agency outside of himself. The code I have to suggest is this: The first fine imposed upon an employe in any calendar year should be one dollar, and each succeeding fine during the same year should be increased by one dollar. The fifth fine in any calendar year should be accompanied by suspension from duty for one week without pay. Any employe who has been fined five times in any calendar year should, for the sixth offense, be dismissed from the service. Any fine for violation or neglect of train rules should be accompanied by one week's suspension

from duty without pay. An employe whose carelessness or neglect results in injury to property should, at the discretion of the superintendent, make good the injury; except that any amount deducted from pay under this rule should not, in any month, exceed one-fifth of his monthly pay, and such deductions for any one offense should not continue for a longer period than twelve months. All fines, deductions, suspensions and dismissals under this rule should be authorized by the superintendent and duly entered on the pay roll. Such entries should state the order or rule that has been violated or neglected. A record of penalties should be kept in the superintendent's office and checked by a monthly report from the paymaster of the penalties entered on the pay rolls. All fines, except to make good injuries to property, should be donated to the employes' mutual relief association. The code should not limit the power of heads of departments or other authorized persons to dismiss employes for incompetency or the good of the service."

I do not believe the enforcement of fines to be desirable. That is, however, merely an opinion. There are many others much better qualified to judge of such matters than I. Well managed companies have tried the experiment and found it to work successfully. There must, therefore, be something in it. How much its success has resulted from merit and how much from the tact and wisdom of officials in charge, I do not know, but in regard to the necessity of rules and the

enforcement of the same we are all agreed. They are necessary to the employe, the employer and the public. In many cases the courts have saved carriers harmless from suits for damages because their rules, if carried out, would have prevented the accident.

CHAPTER III.

THE TRAIN FORCE.

Passing now from the general consideration of the train service, I propose briefly to refer to some of the members of the force.*

And first, the engineer—the key to the arch. This able, experienced and highly trusted employe is in Great Britain called a Driver. While it is not necessary that he should be a machinist, it is essential that he should understand the care and use of tools, especially those making up the outfit of his engine. He must understand, also, how to take a locomotive apart and how to put it together. Hence it is necessary that he should have conquered thoroughly the details of his business. He must also have perfectly familiarized himself with the working of his machine and its multifarious weaknesses. The acquisition of this knowledge, it is apparent, requires long, practical experience and study.

Each locomotive has its peculiarities. No two machines are alike. There may be no difference between them so far as the eye can discern, and

* Railway baggagemen are referred to and their work described in another volume. The duties and responsibilities of the engineer and fireman referred to briefly in this chapter are further and more particularly described in other volumes relating particularly to their duties and the locomotive.

the patterns from which they were built may have been identical, but their steam making power, their inherent force and their behavior generally will be different in many things. The engineer must fathom the secrets of his particular engine; must understand its weaknesses and its strength; how to utilize its forces and how to overcome its inherent defects. His skill in doing this, coupled with his ability to supervise the duties of the fireman, is in the main the measure of his capacity.

The necessity that those who run engines should be men wedded to their office and should pursue it steadily as a business, is too apparent to need argument. Amateurs, or those who desire to go on the road for a time only, have not the knowledge that an engineer should possess. He, above all men, must be practical and conservative and possessed of a comprehensive mind. He must not only be alive to his own duty, but alert to that of others. There must be nothing of the braggadocio about him, nothing pyrotechnical nor spectacular. He must be a conscientious man, taking the safe course, not because the rules tell him so, but because it is his nature.

Such is the engineer. That such a man will be temperate in what he eats and drinks goes without saying. He must withal have good health, and having this, his life is such as to preserve him to a vigorous old age. The hardships of his occupation, while great, are not such as to break him down. He quickly becomes accustomed to his environment, and wedded to his responsibili-

ties. As a set off against the things that harass and perplex him, there are many compensating advantages connected with his business which serve to refresh and encourage him.

It is said of Stephenson that he sought educated men for engineers, but that Brunel preferred those who were ignorant, on the theory that they should not know anything outside of their duties. It is hardly necessary to say that the methods of the former proved superior. Knowledge of the multitudinous affairs involved in the duties of the engineer require a good foundation on which to build. Education forms a foundation. Those who seek to climb higher must conquer still wider fields. Their minds must be alert, strong and supple. They must be able to observe, experiment, analyze and formulate. The possessors of such minds make good agents, engineers, conductors or officers.

Those who seek to fill any office acceptably must learn the steps precedent thereto. It is not necessary that an engineer should first be a fireman, but it is necessary that he should be familiar with the practical workings of a locomotive. The position of a fireman affords this and at the same time enables the person thus situated to utilize the time with advantage to himself and his employer.

The effectiveness of the locomotive is largely dependent upon the skill of the engineer. He, therefore, loses no opportunity to add to his experience and knowledge by studying the construction of his engine; its details; how it is put

together; how taken apart; the relation of the parts to each other, and its general unity. Native talent supplemented by experience and study make a good engineer. Quite a number of books have been written on the locomotive. They contain much valuable information. One writer* says: "The locomotive engine which reaches nearest perfection is one which performs the greatest amount of work at the least cost for fuel, lubricants, wear and tear of machinery and track. The nearest approach to perfection in an engineer is the man who can work an engine so as to develop its best capabilities at the least cost. Capability of handling an engine can be acquired by a few months' practice; opening the throttle and moving the reverse lever require but scanty skill; there is no great accomplishment in being able to pack a gland, or tighten up a loose nut; but the magazine of practical knowledge, which enables an engineer to meet every emergency with calmness and promptitude, is obtained only by years of experience on the footboard, and by assiduous observation while there. To accomplish results, a thorough acquaintance with all details of the engine is essential, so that the entire machine may be operated as a harmonious unit, without jar or pound; the various methods of economizing heat must be intimately understood, and the laws which govern combustion should be well known so far as they apply to the management of the fire. . . . Every advance in brake improvement increases the duties of the engine-

* Mr. Sinclair.

men, and upon them will soon devolve the entire management and control of trains while in motion. The daily wage paid to an engineer is a trifling sum compared to the amount he can save or waste by good or bad management of his engine. Fuel wasted, lubricants thrown away, supplies destroyed and machinery abused, leading to extravagant running repairs, make up a long bill when enginemen are incompetent." The position of engineer grows more important with every advance in train appliances. The more complicated the machine, the more varied its requirements, the greater necessity there is for adaptability upon the part of the person handling it.

The position of engineer is the stepping stone to that of master mechanic. Everyone cannot become a master mechanic, but the position carries this honorable aspiration. Nor does promotion necessarily end there. No other place affords better opportunities for becoming familiar with the physical operations of a railroad. Every position, no matter how high, is thus open to the engineer of capacity and adaptability. Many of the greatest railway managers in the world have been practical engineers. Here, as elsewhere, knowledge is power.

The engineer must have the signals and rules and regulations at his fingers' end. Their requirements as taught by his experience enforce prudence upon his part. He is, without knowing it, the embodiment of conservatism in his actions.

The practice of working engines continuously changed many early customs. Among other

things, it suggested the employment of inspectors to examine engines at particular places, in addition to the inspection of the engineer in charge. The innovation added much to the usefulness of locomotives without increasing the risk of their breaking down. In early days, a locomotive, after a short run, was put into the house, and after being cleaned was allowed to rest, like the engineer and fireman, until the next day. This was a great waste, as experience has since taught.

Prevention is the essence of safety in the operation of trains. It is attained by constant watchfulness. The engineer becomes imbued with this spirit. Nothing on the road escapes his searching scrutiny. Before starting, he examines his machine to see that everything is as it should be. He watches it unceasingly afterward. Every bolt, nut, screw, link, key, rod, guide, spring, oil-box and detail is looked after with unflagging attention. He realizes that the safety of his engine is dependent upon its every part being in order. He trusts nothing to the accidents of chance. In regard to the specific duties of the engineer, the author already quoted says: "The engineer should reach his engine in good season, so that he will not be hurried in getting it ready for the road; he should see that the necessary supplies and tools are on the engine, that the locomotive is properly supplied with coal, that the tank is full of water and the sandbox full of sand; he should see that his engine is kept clean and in good order; he should make systematic inspections of his engine while it is standing over the

pit between trips, should frequently examine the outside running gear, should also examine the boiler for leaks and see to the condition of the grates; he should be careful in oiling to pay attention to the oil cups, and see that the oil boxes are properly packed; he should consider the load to be hauled, the capacity of the engine, and the nature of the track; he should adjust the oil cups so that they will not feed faster than is needed; he should lose no opportunity to examine his engine for defects in machinery. When he leaves the roundhouse he should watch the workings of the various parts of the engine, try the brakes and pumps, and ascertain by the gauge cocks if the water level as shown by the glass water gauge is correct; he should compare his time with that of the conductor before starting; he should approach all stopping places cautiously; he should study his engine in order to obtain results at the least expense for fuel, oil and wear and tear of machinery; he should instruct his fireman in all matters relating to the duties of the latter; he should at all times keep a vigilant lookout for signals, switches and obstructions on the track, and should give the prescribed notice of his approach to crossings, stations, etc.; he should watch his train to see that it is intact. At the end of a trip, fire should be regulated so that a head of steam will be retained sufficient to take the engine into the house after the fire is drawn; he should call the attention of the proper official to any needed repairs to his engine on arriving at the end of his trip; he should use every pre-

caution to guard against damage by fire from his engine; he should report promptly to the proper officer any injury to persons, live stock, or property by his engine.*

As the boy is father to the man and indicates unmistakably the character of the latter, so the fireman is father to the engineer. It follows, therefore, that in order to possess good engineers, a wise selection must be made of firemen.

The fireman is a factor of enormous importance from an economical standpoint in the train service. The fuel that under his manipulation is burned in the firebox of the engine, or blown through its smokestack unconsumed, amounts in the aggregate to a large percentage of the operating expenses. If he is skilful and conscientious in the performance of his duty, his company is fortunate. If he is not, it is unfortunate. Much has been said as to how his duties shall be performed. Manuals have been written for his benefit and experts on many railroads undertake to further enlighten him. Perfection, while attained in many instances, is not universal, as the vast volumes of smoke emitted by locomotives, the result of poor firing, evince. Firemen are born, not made; a good fireman possesses the art instinctively. Practical experience is necessary to all, however, but experience must be carried

---

* I do not think I exaggerate the value of book knowledge too much when I say that everything worthy written on the subject of the duties of those connected with locomotives should be sought and read by the parties interested.

on under the direction of one skilled in knowledge of the principles of combustion as applied to the locomotive. Formulas are laid down as the basis of the art of firing. They are not difficult to learn and are exceedingly interesting and valuable. An instructor* in this field thus explains the combustion of coal. He says it is "A chemical union of the atoms of the coal with the atoms of the oxygen of the air. To effect this union it is necessary that the atoms of the two named substances meet at a high temperature (called the temperature of ignition), which for coal and coal gas is that of bright red hot iron, or about eighteen hundred degrees. At this temperature the attractions of the atoms of coal and oxygen become so great that they clash together, and light and heat are the result of their collision. . . . The first thing that happens when coal is put on a fire is that the coal absorbs a great amount of heat, and the work the latter performs is to expel the gaseous matter of the coal, the constituents of which are two atoms of hydrogen and one atom of carbon, called carbureted hydrogen. Now, if the temperature is sufficiently high, as explained, the attractions existing between the oxygen and gas are so intensified that they clash together, and light and heat result, and they are burned, the products of their combustion being vapor of water and carbonic acid gas. At the igniting temperature the hydrogen separates itself from its fellow constituent, the carbon,

---

* George H. Baker.

and combines with the oxygen present, forming vapor of water. This is because the oxygen has a stronger attraction for the hydrogen than it has for the carbon, and not until the hydrogen meets and combines with its equivalent of oxygen does the carbon take its turn. The carbon vapor yields up one of its atoms to two atoms of oxygen and in that proportion combines with oxygen and is burned, forming carbonic acid. In this manner the gaseous portion of the coal is expelled and consumed, leaving the most of the carbon yet upon the grates in a solid, incandescent state. A proper supply of oxygen alone will enable it to perfectly burn and yield up its greatest heat.'' The same writer enters with considerable particularity into the practical duties of the locomotive fireman; they are to see that the grates and appurtenances of his engine are in proper order and that the full complement of tools is on hand before starting; that the flue sheets are cleaned of clinkers before his engine is fired up, and that the fire is evenly placed over the entire grate surface; that a bed of fire covers the forward portion of the grate next the flue sheets before the blower is used; that the blower be used as lightly as possible; that there is sufficient fuel on the fire before starting the locomotive to hold it and keep up steam while the engine is getting under way; that opening the fire door while the exhaust is strong should be avoided as much as possible; that coal is broken into pieces as near egg size as possible; that in firing the coal is scattered over

the surface of the fire evenly, giving the sides and corners the preference.* Coal is not to be thrown in heaps on any part of the fire, but is to be put on lightly and frequently and the door closed between each shovelful when the engine is working. Grates are to be shaken lightly every thirty miles in the case of passenger trains and every twenty miles in the case of freight trains. If clinkers accumulate in the fire box, they are to be removed at the first opportunity. Steam pressure is to be kept within prescribed limits and not permitted to change rapidly either way. The blower should be used while the injector is working, so as to prevent change of temperature of the boiler. To prevent or stop the engine blowing off, the supply of water is to be increased or the damper dropped. If necessary to open the door of the fire box while the engine is working, it is to be done slightly or swung open and shut. So far as practicable, the smoking or drumming of the engine while at stations, or when attached to or in the vicinity of a passenger train, is to be prevented. Ash pans and fires are not to be cleaned near a bridge, culvert, depot or building, or on a frog or switch, and the fire is to be extinguished with water before leaving it. Finally, that at the close of a run, when the fire

* This last is known as the "spreading system." There is, however, another system of firing practiced known as "banking." When the latter is employed, the coal is piled up at the back part of the fire box, sloping down toward the front, where the layer of coal, being thin, is naturally in a high state of incandescence. When the heap of coal at the back of the fire box is thoroughly coked it is pushed forward, and a fresh supply of fuel put in its place to undergo the same process.

has been removed, the dampers and fire doors are to be kept closed while the engine is being handled.

The cost of fuel is one of the largest items of expense, as I have intimated. It is probable that in time some substitute will be found for coal, but until then it should be utilized in the most effective manner possible, by scientific construction and skilful firing. Much study has been given to the subject and considerable pains taken to instruct firemen in their duties. Mr. Sinclair, in his admirable book, says: "To comprehend what causes fire to burn, we must understand something about the laws of nature as they are explained by chemistry. Practical men are generally very easily repelled by the strange names they meet with in reading anything where chemical terms are used. An engineer or fireman who is ambitious to learn the principles of his business ought to attack the hard words with courage and perseverance, when it will be found that the difficulties of understanding them vanish. A man may become a good fireman without knowing anything about these laws. This frequently happens. If he becomes skillful in making an engine steam freely, while using the least possible supply of fuel, he has learned by practice to put in the coal and to regulate the admission of air in a scientific manner. That is, he puts in the exact quantity of fuel to suit the amount of air that is passing the fire box, and in the shape that will cause it to produce the greatest amount of heat. When this degree of skill is attained by men ignorant of

nature's laws, it is attained by groping in the dark. A man who has acquired his skill in this manner is not, however, perfectly master of the art of firing, for any change of furnace arrangement is likely to bewilder him, and he has to find out by repeated trying what method of firing suits best. He is also liable to waste fuel, or to cause delay by want of steam when anything unusual happens. A knowledge of the laws of combustion teaches a man to go straight to the correct method, and the information possessed enables him to deal intelligently with the numerous difficulties which are constantly arising owing to inferior fuel, obstructed draft due to various causes, and to viciously designed fire boxes and smoke boxes. The nature of fuel, the composition of the air that fans the fire, the character of the gases formed by the burning fuel, and the proper proportion of air to fuel for producing the greatest degree of heat, are the principal things to be learned in the study of laws relating to combustion. The elements which perform the most important functions in the act of combustion are oxygen and carbon. Carbon is the fuel, and oxygen is the supporter of combustion. Combustion results from a strong natural tendency that oxygen and carbon have for each other, but they cannot unite freely till they reach a certain high temperature, when they combine very rapidly with violent evolution of light and heat. When air, drawn violently through the grates by the suction of the exhaust, strikes the glowing fuel, the

oxygen in the air separates from the nitrogen and combines with the carbon of the coal. In some cases elements combine in different proportions to form different kinds of products. If the supply of air is so liberal that there is abundance of oxygen for the burning fuel, the carbon will unite in the proportion of twelve parts by weight (one atom) with thirty-two parts by weight of oxygen (two atoms). This produces carbonic acid, an intensely hot gas, and, therefore, of great value in steam making. If, however, the supply of air is restricted and the oxygen scarce, the atom of carbon is contented to grasp one atom of oxygen, and the combination is made at the rate of twelve parts by weight of carbon to sixteen parts by weight of oxygen, producing carbonic oxide gas, which is not nearly so hot as carbonic acid gas. It makes a very important difference in the economical use of fuel which of these two gases is formed in the fire. When combustion is rapid the fuel must be saturated with the air that contains the oxygen, bathed in it, as it were, otherwise a large portion of the furnace gases will pass away uncombined with the element that gives them any heating value. There are several practical objections to the air blowing through the grates like a hurricane. The high speed of the gases lifts the smaller particles of the fuel and starts them toward the entrance of the flues, helping to begin the action of spark throwing. Where they find a thin or dead part of the fire, the gases pass in below the igniting temperature, or tend in spots

to reduce the heat below the igniting point, and go away unconsumed, at the same time making a cold streak in the fire box, chilling the flues or other surface touched, and starting leaks and cracks. Then the great volume of air has, under ordinary circumstances, to be heated up to the temperature of the fire box and a considerable part of the heat produced from the coal has to be used up doing this before any of it can be utilized in steam making. When a large volume of gas is employed it must be passed through the furnace and tubes at a high velocity, the result being that there is not sufficient time for the heat to be imparted to the water; consequently the gases pass into the stack at a higher temperature than would be the case if the movement of the gases were slower. One can get a good personal illustration of this by passing his hand through the flame of a gas burner. Good firemen keep sufficient fire on the grates to suit the way the engine is working, and enough to prevent loss from air passing up so freely as to reduce the temperature of the fire box. They keep up the fire by throwing in a shovelful or two of coal at short intervals, and the result is that the greater portion of the hydrocarbon gases is burned, and very little smoke is seen issuing from the stack. When the engine is stopped at a station or any other place, the fireman has planned ahead to have a good fire. When the train starts he is on the lookout for signals and switches, and when the engineer hooks up the links and the pull of the exhaust is light, he replenishes the fire.

Although he keeps up his fire at stations and stopping places, he prevents his engine pouring out a cloud of black smoke by not putting in a heavy charge of coal at one time. Thus he maintains a flame on top of the fire, which consumes the gases that would make smoke. If it is necessary to put in considerable coal at a station, he closes the dampers, opens the fire door slightly and starts the blower. By such exercise of care he reduces the consumption of coal and, so far as possible, burns up the smoke." It is as true of firemen as it is of others that each year teaches some new thing, adds something to the knowledge we possess by which work is made more effective.

While the fireman has not become a scientist, he is better acquainted with effective means of generating steam at the lowest cost, than formerly. While he may not understand scientific formulas, he fires according to scientific principles. He puts on the fuel in quantities best suited to perfect combustion, being governed by the load to be hauled, the speed to be attained, peculiarities of engine, kind of coal, weather, character of road, and so on.

The physique of the fireman, it is apparent, must be of the highest type in order to enable him to perform satisfactorily the hard work that devolves upon him. Although the fireman's duty, as his title indicates, is primarily to look after the fire, he incidentally attends to many other important things, such as replenishing the tender with water, ringing the bell, cleaning the

ash pan, shaking the grates, filling the oil cans, attending to lights and keeping the engine clean.

Firemen, according to the customs of railways, are frequently called upon to act for the engineer, and are, therefore, in many respects, his deputy. In case of accident befalling the engineer, the fireman must be able to supply his place temporarily. He is, therefore, something more than a fireman. To make a good engineer, he must possess intelligence, industry, sobriety, good habits and an observing mind. He must necessarily receive thorough prior training. This he gets as fireman.

Familiarity with the performance of the engine by day and night, in all kinds of weather and on every kind of track, enables those in charge to tell, with accuracy, the speed a machine is making. Exactly how they are able to do this, they cannot tell. It is partly intuition, in which the sound of the revolving wheels, the sway of the locomotive and the fleeting objects by the wayside help to aid the judgment.

Only by long familiarity with the workings of a locomotive are men able to detect, instantly, when anything is wrong; to distinguish normal from abnormal conditions. "It requires an experienced ear to detect the false note amid the mingled sounds produced by an engine and train hammering over a track. The novice hears nothing but a medley of confused noises, strange and meaningless as the harmonies of the opera to a savage. But the trained ear of the engineer can

distinguish a strange sound amid the tumult of exhaust, screaming steam and clashing steel, as readily as a musician can detect a false note in a chorus. Upon this ability to detect defects, which pave the way to disaster, depends much of an engineer's chances of success in his calling. This kind of skill is not obtained in a few weeks. It is the accumulation of months and years of patient labor." Long experience is also necessary to enable the engineer to handle a locomotive with ease and smoothness, and preserve uniformity in starting and stopping. Lack of skill in these respects is quickly noticed and commented upon by travelers.

The fireman learns little by little. In time he is able to pass his examination preparatory to becoming an engineer. These examinations have not been general, but each year are more and more favored by railroad companies. There is nothing about them to excite dread. They are confined to practical things and do not deal with the philosophy of the subject.

The duties of the fireman, like those of the engineer, are multifarious. Among those of a primary nature that may be recapitulated are the following: He must be at his post before starting on a trip in time to make such disposition of the fuel supply as circumstances and the rules require; to see that oil cans are filled and ready for use; that the fire is properly made; that the engine is clean; that supplies necessary for the trip are in their places; that flags, lanterns and other signals are on hand; that lamps are

trimmed; that the ash pan is clean; that tools are on hand for handling fuel and attending to the fire; that the water tank and sand box are full; that there is no delay in taking water on the road; that the cinders and clinkers are removed from the grates and the ashes from the ash pan, if necessary, when stops are made at coaling stations; that the fire is equal to the work the engine has to perform, and, finally, that the fuel is applied in such a way as to secure the greatest possible volume of steam. Withal, he must keep a sharp lookout for signals and report promptly to the engineer anything he notices that the latter should know.

The conductor handles all the traffic of railroads, and in America collects more or less of their receipts. With the engineer he represents the central idea of railroads as carriers. He is the skilful and highly trusted representative of his company, and, from the nature of his duties, a semi-public servant. It is his office to see that the cars in his train are in good order and properly equipped for service. He represents his employer in all his dealings with passengers. He is responsible and it belongs to him to see that the train force is attentive and regardful of the conveniences, rights and, as far as possible, prejudices, of travelers. He is also the conservator of order and empowered to compel its observance on the part of every one on his train.

Each year lessens the responsibilities of conductors in particular directions and adds to them

in others.* The better systemization of the service and the introduction of new and improved appliances make the responsibilities of the conductor less onerous in many things than formerly, but, on the other hand, increased business and more complicated methods of ticketing passengers add to his duties in other directions. The old time canal boat captain and stage driver did very well for railroad conductors in the early days of these properties, but at the present time men of high attainment are required to perform the work.

A conductor must be a man of tact. The demands upon him in this direction are great and constant. He must also be a man of patience and forbearance. He must be discriminating, and, to be so, must be wise. Thus, to illustrate, his rules will require him to collect a ticket, or, in the absence of a ticket, a fare from every passenger, but there will be exceptions to the rule, although the company makes none. His dilemma here is only one of the many perplexing incidents of his daily life.

The management of his train demands the constant attention of the conductor. If passengers are carried, they add tenfold to his responsibilities. On American roads he scans, so far as he can, each person entering the train. Afterward he seeks to locate and identify them in their

* In speaking of conductors here I refer more particularly to those on American railways, or those operated on the American plan. The responsibilities and duties of conductors or "guards" in Great Britain and on the continent of Europe are more restricted.

order, so as not to disturb those from whom he has already collected tickets. To the casual observer the conductor wanders back and forth through his train often without aim. In reality this is not true. Among other perplexing things the conductor is called upon constantly to interest himself in the petty affairs of the nervous and inquisitive among his passengers. The rattle of a loose brake rod is sufficient to throw the former into spasms and precipitate a hundred questions from the latter. However, the harassment of conductors in this direction grows less and less each year, as people become more and more accustomed to railroad travel. In early days the conductor was a target for innumerable questions at every stop, as he went back and forth in his train.

Under the American system the conductor is oftentimes sorely beset in his fiduciary capacity. His honesty, no matter how unimpeachable, may at any moment be questioned. This because there cannot in the nature of things be any adequate check placed upon his acts. This is the unutterably sore spot in his life. If trustworthy, he is still liable to misrepresentation. If unfaithful, to detection. That he often suffers unjustly, there can be no doubt. A remedy for this unfortunate situation, however desirable, has been found exceedingly difficult.

The difference in the degree of excellence that conductors attain in their ability to satisfy the requirements of passengers and others, without sacrificing the company's interests or prestige, is

remarkable. With one conductor an accident will be made to appear natural and excusable; with another it will seem to be avoidable and inexcusable.

The trustworthiness of the brakeman on our passenger trains is as stable as that of a bank teller. This without ostentation. Every traveler has in his own experience had occasion to observe acts upon the part of these employes of railroads that only those inherently honest are capable of. Yet a "tip" in such cases is ever gratefully accepted, for the brakeman is not proud to the extent of refusing favors of this kind.

The brakeman is the lieutenant of the conductor, and so accustomed is he to the movements of the train that the slightest break or disarrangement of its machinery instantly attracts his attention.

Like the rest of us, he is a man of averages. He finds it impossible to please everybody. He, therefore, endeavors to please the greatest number and to placate the balance. He cannot keep the car heated to the temperature some would like, so he endeavors to strike a happy mean—something that will prevent the full blooded from fainting and the thin blooded from freezing. But, if importuned, he will open a window, or close it, whether or no, if the request is not too glaringly inconsistent with the comfort of others. His amiability is great under every circumstance, and the desire to please a part of his daily life.

He is much harassed in his duties by freaks and cranks. To them the car is ever too hot or too cold, ever too dirty from neglect, or too damp from much washing. He, however, bears with his tormentors patiently, finding compensation in his wages and the commendation of his superiors. His intercourse with passengers, it is noticeable, is almost wholly with the extremists. Not that he cultivates such company. Far from it. He is not eccentric himself and does not like eccentric people. But in his peregrinations they, above all others, lie in wait for him. He cannot escape. He can only dally.

The disposition of the brakeman is accommodating. As he stands beside the steps of his car, assisting passengers to enter or alight, he is full of benignity—a man of information and precedents. His position is apparently a sinecure, prosy and monotonous. This is its normal state. There are times when his patience and courage are tried to the utmost by vicious passengers, and while he ever seeks to avoid conflict, he is without fear, and, if necessary, will singly attack a mob without thought as to the result. He fears neither pistols, bludgeons nor knives, but seizes the unruly passenger as he would a bag of feathers, and, hurrying him to the platform, hurls him from the train.

The system more or less in vogue in America of making the brakeman, to a certain extent, the guardian of the rear of the train in case of detention, causes him to be an important factor at such times. Consequently, it is of the utmost

importance that he should have good judgment, be energetic, conscientious and quick in the discharge of his duties.

CHAPTER IV.

THE PHYSICAL AND EDUCATIONAL REQUIREMENTS OF THE TRAIN SERVICE.

The railway service being dependent for its efficiency on the minute and orderly performance of physical acts, has of necessity many similarities to the military service. Conformity to rules and obedience to orders and ability to carry out both rules and orders are the essential requirements of every employe.

Before a man enters the service, therefore, it is necessary to ascertain that he is qualified bodily and mentally to perform the duties which will devolve upon him, and as these duties have the closest relationship to the safety of life and limb of his fellow employes and the patrons of the road, as well as to the safeguarding of property of untold value, great care is exercised by well organized railways to see that no one enters their service or remains therein who does not attain to a set standard in respect to his physical and mental attainments. Thus persons engaged in the train service must have such clear vision that they can readily see and distinguish all kinds of visible signals; their hearing must be perfect;

they must have sufficient strength for performance of the duties of the position they are to fill; they must be so robust that their service will be continuous; they must be able to speak with fluency; they must have sufficient education to enable them to read, write and use the primary rules of arithmetic, and, finally, must have sufficient native intelligence to understand an order when given orally or in writing and carry out the same.

Perhaps the most insidious defect not easily to detect, and sometimes unconsciously concealed, is that of color blindness.

Details relating to color blindness are considered of vital importance in connection with the operation of trains in all the countries of the world where railroads are known. They therefore find an appropriate place here. The disease or defect known as color blindness is defined as partial or total inability to distinguish particular colors. The latter manifestation is exceedingly rare. Color blindness is, in many cases, hereditary. Frequently, however, it is caused by disease or the use of alcohol or tobacco. It is also occasioned by overtaxing the eyes, accidents, a sudden jar or similar cause. A person, therefore, who has good eyesight to-day may not be similarly blessed to-morrow.

Color blindness is not due to any particular color of the eyes, and those who are thus afflicted may still possess good eyesight so far as distinguishing objects is concerned. If hereditary it is incurable, but in other cases it frequently yields to treatment. The disease is much more rare in

women than in men. People who are color blind are oftentimes not aware of the fact, i. e., they are not conscious that other people do not see things as they do.*

Those who are color blind are oftentimes very sensitive about it. In many cases man's intelligence and judgment supply the deficiency of a defective eyesight. Dr. Stillings says, as a word of warning to those who are testing for color blindness: "It is a well known fact that color-blind persons, by exercising their faculty of judgment, can aid their want of sensibility and so conceal their defect to a certain extent. They have learned the names of colors quite as well as normal sighted people, and by the help of every outward sign they have acquired a certain knowledge of those pigments to the characteristic tints of which they are blind." †

Those who are color blind "can sort and place in correct order a series of shades of red or green much better and more quickly than the normal eyed, because to them the color is but so much light and dark. A color blind person is asked to buy a skein of red worsted to match a pattern. He asks the attendant in the store for red worsteds, and selects the one which corresponds in luminosity with his pattern. Such a test appar-

---

* This is true also in regard to those who are afflicted with astigmatism. In my own experience I was unaware, until I was forty years old, that everybody did not see objects exactly as I saw them. The discovery that my eyesight was not accurate in this particular was purely accidental.

† "Color Blindness; Its Dangers and Detection," by B. Joy Jeffries, M. D.

ently forbids the idea of any chromatic defect. But, we will suppose the worsted attendant is away, and another, who is also color blind, hands over the greens to the purchaser; the latter will then complacently select the one which matches in luminosity with his red pattern. If he is green blind, he will select a lighter green—if red blind, a darker—than his pattern. This sensitiveness to light shade has enabled color blind painters to follow their profession with success, and even avoid discovery, until accident or design has interchanged, for instance, their reds or greens.''* The unconsciousness of color blind people of their defect illustrates in an apt way the common defects of temper and perception. Thus, men understand a thing in a certain way and believe others who differ with them to be stupid or ignorant or willful, wherever the difference is inherent.

Many shades of difference exist in regard to the peculiarities of color blind people. Thus, some see certain colors perfectly while they cannot distinguish others, or, at best, see only a shade of difference. It is this shade of difference that deceives them into believing they see objects as other people do, and renders the mere apprehension of a person in regard to a color not at all conclusive. To be certain that he is not color blind, it must be demonstrated by comparison and selection. The orbit of our vision is exceedingly restricted. Dr. Jeffries, in his admirable book, says: "Our point of best vision on the retina

* Jeffries.

is directly in the center, and over but a small space here; so that, to see an object distinctly, we must carefully turn the eye, to keep the picture on this portion. In looking at a long word on a page, we unconsciously travel along it to catch all the letters. If we keep our eye fixed on one point, and move a letter away from this point, its form is soon lost, and we fail to recognize it; let one eye be closed, and the other fixed on a bright red object, like a wafer, held before it; when moved gradually out from the central field of vision, the wafer will decrease in brightness, and finally appear black. Its form we may still discern. This is not color blindness. Whenever the retina is tired out with one color, it can only perceive the complementary one. If with one eye we gaze steadily for some seconds at a bright green disk on a white ground, and then quickly look at another white surface, we shall see a red disk. Gazing fixedly at the setting sun when a deep red, and turning quickly to the east, we shall see a rising green sun. I hardly need say this also is not color blindness. The crystalline lens in the eye becomes, with age, harder, and of a yellowish color—up to positive blackness. When opaque, it prevents, of course, the passage of light through the pupil; it is called cataract. This opaque lens we then remove from the eye, and replace it by a strong convex lens in the spectacles. This is not true color blindness. Another physiological fact in relation to color perception is very important, and seems to be generally quite unknown or neglected. Around

the point of best vision in the center of the retina is a zone where we perceive all of the three so-called base colors—red, green and violet. Outside of this there is another zone, in which we have a perception of only two, namely, green and violet; and again, beyond this, on the retina, only blue or violet is perceived.'' A person who is color blind would be likely to paint a blue sky pink or rose color, or a red object green, or a brown house olive.*

Thomas Young and Professor Helmholtz, who have given the subject of color blindness most exhaustive study, describe its physiology as follows: ''There are in the eye three kinds of nerve fibers. Stimulation of the first produces the sensation of red, the second that of green, and of the third the sensation of violet. Objective homogeneous light excites these three kinds of fibers in varying degree according to the wave lengths. The red perceptive fibers will be strongest stimulated by light of the greatest wave length, the green perceptive by light of medium wave length, and the violet perceptive by light of the smallest wave length. Here must not be excluded, but rather accepted in explanation of a series of phenomena, that each spectral color excites all three kinds of fibers—but one less, the others more strongly. Simple red strongly stimulates the red perceptive, less the other two; sensation,

* The study of color blindness is comparatively recent. Several books have been written on the subject. The first case which attracted general attention was that of an English chemist named Dalton, in 1794. In many countries, color blindness has been denominated ''Daltonism.''

red. Simple yellow stimulates moderately the red and green perceptive, feebly the violet; sensation, yellow. Simple green stimulates strongly the green perceptive, much less the other two; sensation, green. Simple blue stimulates moderately the green and violet perceptive fibers, feebly the red; sensation, blue. Simple violet stimulates strongly the violet perceptive, feebly the other fibers; sensation, violet. Equally strong stimulation of all the fibers gives the sensation of white or whitish colors. The term color blindness indicates a genuine blindness to one of the primary colors. In this way, therefore, we distinguish, according to the kind of element wanting, three classes of blindness—red blindness, green blindness, violet blindness. Blindness to red is due to the absence or paralysis of the organs perceiving red. Red blindness has, then, but two fundamental colors, which, adhering strictly to the theory, are green and violet. Green blindness derives its origin from the absence or paralysis of the perceptive elements of green. The green blind has, therefore, but two fundamental colors, red and violet. Violet blindness (or blue) is due to the absence or paralysis of the elements perceiving violet. The two primitive colors of the violet blind are, then, according to theory, red and green."

As to exactly how color blind people see, Mr. William Pole, who was thus afflicted, has described his experiences: "In the first place, the color blind see white and black, and their intermediate or compound gray (provided they are

free from alloy with other colors), precisely as others do. Yellow and blue, also, if unalloyed, we see, as far as can be ascertained, in the normal manner. But these two are the only colors of which we have any sensation. We do see all such things, but they do not give us the color sensations correctly belonging to them; their colors appear to us varieties of the other color sensations which we are able to receive. Take first the color red. A stick of red sealing wax conveys to me a very positive sensation of color, by which I am perfectly able to identify, in a great number of instances, bodies of this hue. But, when I examine more closely what I really do see, I am obliged to come to the conclusion that the sensation I perceive is not one that I can identify separately, but is simply a modification of one of my other sensations, namely, yellow. The appearance of green to the color blind corresponds exactly to that of red. Green, in its true aspect, is invisible to them, and, consequently, when neutral—i. e., unmixed with any other color—it presents, to their eyes, the appearance of gray. When, however, it is mixed with yellow (and most of the greens in nature are yellow greens), they see the yellow only, but diluted or darkened by the invisible green element; and in less frequent cases, where the green is mixed with blue, they see the blue element only in like manner. It is therefore easily understood how so simple a defect of vision gives rise to a complex series of symptoms. Take first the color red. If it is a scarlet variety, as the majority of

reds are, presenting the appearance of yellow to the color blind, they may naturally confound it with the latter color, as well as with orange, with yellow-green, and with brown, all of which cause to them the same sensation. If, on the other hand, the red contains a predominance of blue, it may be confounded, on the same principle, with blue or violet. If it is a neutral red, lying between the two, it will be confounded with black or gray. A pale pink, though very distinctly colored to the normal eyed, often offers so little color to the color blind as to be mistaken for white or very light gray. The same explanation will apply to green. Its yellow varieties may be compounded with red, orange, yellow and brown; its blue varieties with blue and violet, and its neutral hue with black or gray, or, if pale, with white."

Those who cannot distinguish red are said to exceed all others in the ratio of four to one. Professor Holmgren says: "He whom we call color blind is not, correctly speaking, at all blind to colors. He perceives, in the main, the same kind of light as the normal observer, but sees a part of it in another manner. In the system according to which he arranges his colors, he has fewer kinds than the normal observer. A color blind person can no more accustom himself to seeing colors as the normal observer does, than the red blind can see color in the same way that the green blind does, or conversely. To judge correctly of color blindness, and the various practical questions connected with it, it is of the

highest importance to distinctly observe the difference between the manner in which the color blind person sees, and the manner in which he names colors."

From statistics gathered from the examination of ten thousand people, it was found that four per cent. of men have seriously defective eyes, so far as their ability to discern red and green colors from each other is concerned. The seriousness of this conjunction is apparent when we remember that the danger signals of many carriers are red or green.

Testing for color blindness is required by many governments, and is practiced more or less systematically by carriers, of their own volition. Attempts to legislate in regard to it in the United States have met with much opposition, and laws passed to enforce examinations of those connected with the train and signal service of railroads have in some cases been repealed because of the opposition of railroad employes. This opposition, however, it must be confessed, serves rather to excite than allay apprehension. If the defect is only occasional and unimportant, why oppose examination? If serious, it is important to other employes, as well as those who travel, to know the exact risk they run. If other devices than colored signals were possible, the dilemma might be overcome, but unfortunately they are not.

Color blindness being established as a fact, the question naturally occurs, how may it most surely be detected? By taking those to be examined to

the different signals of railroads and asking them to describe them? No. It must be done scientifically. Otherwise, those who wish to conceal the fact will oftentimes be able to hide their defect, or to render its presence questionable. Different methods have been suggested by scientists for detecting color blindness by simultaneous contrasts of different colors, such as the use of colored shadows, colored glass, colored paper, colored worsteds, the spectroscope, and other means.

The following specific rules and regulations in regard to the determination of physical and educational qualifications of persons who can fittingly be employed by the operating department of railways have been formulated by the American Railway Association:

RULES.*

1. The qualifications essential in certain positions** must be determined by the examinations prescribed by these rules.†
2. Application Blank, Form —— ‡, must be used by candidates for employment and by those selected for promotion.
3. Candidates for employment or selected for promotion must pass the prescribed examinations and tests before being permitted to enter, except temporarily, upon the duties of the position sought.
4. The general mental characteristics and the bearing of the candidate must be noted on the application blank by the examiner.§
5. Re-examinations may be ordered at any time by proper authority.
6. Applications will be approved or rejected by proper authority.

---

* Adopted April 5th, 1905.

** These positions are to be determined by each road in accordance with its organization.

† Examinations should not be made when the candidate has just come in from a run or been subject to unusual fatigue.

‡ Form (A) which can be used either by candidates for employment or for promotion is recommended.

§ Such as: confident; diffident; bright; dull; quick; slow; etc.

PHYSICAL EXAMINATIONS.

VISUAL.

Qualifications.

7. Examinations must develop—
   - *a.* Sufficient acuteness of vision to clearly see the prescribed visible signals.
   - *b.* Ability to clearly distinguish the colors of the prescribed visible signals.

7*a.* ACUTENESS OF VISION.

Requisites.

CLASS A.—ENGINEMEN, FIREMEN, CONDUCTORS, TRAIN BAGGAGEMEN, BRAKEMEN AND FLAGMEN IN ROAD AND YARD SERVICE.

Entrance to Service.	Promotion.	Re-examination of those in the Service.
$\frac{20}{20}$ in one eye and not less than $\frac{20}{30}$ in the other; tested without glasses.	$\frac{20}{20}$ in one eye and not less than $\frac{20}{30}$ in the other; tested without glasses.	—* in one eye and not less than —* in the other; tested without glasses.

CLASS B.—SIGNALMEN†, SIGNAL REPAIRMEN AND TELEGRAPHERS.

Entrance to Service.	Promotion.	Re-examination of those in the Service.
$\frac{20}{30}$ in one eye and not less than $\frac{20}{40}$ in the other; tested without glasses.	Not less than $\frac{20}{30}$ in one eye and not less than $\frac{20}{40}$ in the other; tested without glasses.	—* in one eye and not less than —* in the other; tested without glasses.

CLASS C.—OTHER EMPLOYES IN THE ENGINE, TRAIN OR YARD SERVICE, CAR AND ENGINE INSPECTORS, AND BRIDGE AND TRACK FOREMEN.

Entrance to Service.	Promotion.	Re-examination of those in the Service.
Not less than $\frac{20}{30}$ in one eye and not less than $\frac{20}{40}$ in the other; tested without glasses.	Not less than $\frac{20}{30}$ in one eye and not less than $\frac{20}{40}$ in the other; tested without glasses.	—* in one eye and not less than —* in the other; tested without glasses.

CLASS D.—CROSSING WATCHMEN.

Entrance to Service.		Re-examination of those in the Service.
$\frac{20}{40}$ with both eyes open, without glasses.		—* with both eyes open, without glasses.

* It is recommended that each road fill the blank with the figures which best suit its conditions and the requirements of its medical examiner.

† Class B should include station agents when they are required to perform the duties of signalmen.

In case of failure of a candidate for re-examination under Class A, or for entrance to service, promotion or re-examination under Classes B, C and D, to pass the tests when examined without glasses and further expert examination shows that with glasses the tests can be met satisfactorily, the acceptance of the candidate is optional.

Equipment.

1. A set of at least two standard cards of Snellen's test letters showing letters of various sizes, from 20 to 70 inclusive. The letters to be arranged in different order in the corresponding lines of each card.

2. A standard reading test card with matter printed in various type.

3. A test spectacle frame with opaque disc.

Adjunct.

The following may be used if desired—

A set of test cards showing semaphores in various positions.

METHOD OF TESTING.

Letter Card Test.

Place the candidate to be examined so that he will not face a strong light; cover one of his eyes with opaque disc in test frame; place one of the cards, at a distance of 20 feet from him, in a clear light, but not in direct sunlight, and direct him to read the letters on certain lines as selected by the examiner, including the line marked 20. A portion of the test card may be covered and the candidate required to read the remainder of the line of letters, or certain letters at each end of the line may be covered and the candidate required to read the intervening letters. If he can read the letters on the line marked 20 correctly, substitute another card with a different arrangement of letters and test in a similar manner. If he reads the letters on the line marked 20 on both cards correctly, it indicates normal vision. If he cannot read the letters on the line marked 20 direct him to read the lines above 20 successively until a line is found which he can read.

Record in fractions the acuteness of vision as determined, the numerator being 20 (the distance at which the card is placed) and the denominator the number on the card showing the smallest sized letters that he has read correctly.*

---

* If the letters on the line marked 20 can be read with each eye separately the record should show 20-20. If the letters on the line marked 20 cannot be read, and the letters on the line marked 30 can be read, the record should show 20-30. If the letters on the line marked 30 cannot be read, but those on the line marked 40 can be read, the record should show 20-40. If the letters on the line marked 40 cannot be read, but those on the line marked 50 can be read, the record should show 20-50. If the letters on the line marked 50 cannot be read but those on the line marked 70 can be read, the record should show 20-70.

Repeat this test with the other eye and record the results.

Mistakes of not more than three letters on the 20 line; two letters on the 30 line, and one letter on the 40 line will be considered as a satisfactory reading. Other lines must be read without error.

If the results of the tests are not conclusive to the examiner he will refer the case to the ——* for decision.

Reading Card Test.

Direct the candidate to read certain letters or sentences from the standard reading test card and record the smallest size of print read correctly at the ordinary distance of from 14 to 18 inches. A portion of the test card may be covered and the candidate required to read the remainder of the paragraph. The candidate should be able to read the print in paragraph No. 2 of the Standard Card to pass the test satisfactorily. This test should be made without glasses except at the age or under other conditions where the use of glasses is permitted.

If the results of the tests are not conclusive to the examiner he will refer the case to the ——* for decision.

7b. COLOR-PERCEPTION.

Equipment.

One set of Holmgren's colored worsteds, as simplified by Dr. Wm. Thomson, tagged for reference by lettering A, B and C and numbering 1 to 40.

Group *A*, containing the light green skein *A*, the similar shades numbered 1, 3, 5, 7, 9, 11, 13, 15, 17 and 19, and the confusion shades numbered 2, 4, 6, 8, 10, 12, 14, 16, 18 and 20.

Group *B*, containing the rose skein *B*, the similar shades numbered 21, 23, 25, 27 and 29, and the confusion shades numbered 22, 24, 26, 28 and 30.

Group *C*, containing the red skein *C*, the similar shades numbered 31, 33, 35, 37 and 39, and the confusion shades numbered 32, 34, 36, 38 and 40.

Adjunct.

The following may be used if desired—

A lantern showing a number of colored lights which can be varied in size and intensity.

METHOD OF TESTING.

Holmgren Test.

Place the whole number of colored worsteds on a table in good, clear daylight. Put the test skein *A* at a distance of about two feet from the other colors and ask the candidate being examined to select from the heap of colors all that look to him like the test

---

* To be filled in by each road in accordance with its organization.

skein, and place them beside it. Have him understand that he is not expected to find an exact match for the test skein, but that he is to choose all the colors that appear to him of the same general color as the test skein, both those that are lighter and those that are darker in shade. If he does not easily understand what is wanted, let the examiner himself select the colors; then, having returned them to the general heap and mixed them thoroughly with the rest of the colors, let him call on the candidate being examined to repeat the selection. This demonstration will not enable a candidate who is defective in his color perception to select the colors correctly, and he may pick out as looking to him like the test skein *A* some greens and also some of the gray or brown confusion colors, which will appear to him of the same general color as the test skein, only varying from it in shade. Record on the form the numbers on the tags of the colors incorrectly selected as being similar to the test skein *A*, and also note whether the selection is prompt or hesitating, by writing the letter "P" or "H" on the line opposite each of the names of the colors as printed. Return all the colors to the heap and mix them together, then place the test skeins *B* and *C* successively apart from the rest and have the candidate being examined select, as before, all the colors that look to him like each skein, and record the results as for skein *A*.

No names should be mentioned in connection with any color in the above worsted tests, which should be based only on a comparison of colors.

If the candidate being examined selects as looking like the green test skein *A* any of the reds, or as looking like the rose test skein *B* any of the greens, the candidate shall be rejected.

If the candidate for employment selects some of the grays or browns as looking like the green test skein *A*, or some of the grays, blues or violets as looking like the rose test skein *B*, the candidate shall be rejected. If a candidate for promotion or reexamination makes such a selection, full report should be made and referred to the ——— * for decision.

The selection by the candidate of one of the "colors of confusion" (even numbers 2 to 20) as matching test skein *A*, indicates color blindness. The failure to do this, but a manifest disposition to do so, indicates feeble color perception; making correct selection to match test skein *B*, having failed to match test skein *A*, incomplete color blindness is indicated. But should he in this test select the purple, the green and gray shades also, or one of them, complete green blindness is indicated. The test with skein *C* (which is applied only to those who are color blind as to green or red) should be continued until the candidate under examination has selected the specimens of or a greater part of the skeins belonging

* To be filled in by each road in accordance with its organization.

to this color, or else one of several "colors of confusion" (even skeins 32 to 40). In this test red blindness is proven by the selection, besides the red shades, of olive green and dark brown shades of a darker quality than the red test skein. Green blindness is proven by the selection of similar confusion colors, but of a quality lighter than the red test skein.

AURAL.

Qualifications.

8. Examinations must develop ability to hear distinctly.

Equipment.

Adjunct.

The following may be used if desired—
A ratchet acoumeter.

METHOD OF TESTING.

Place the candidate at a distance of 20 feet, with one ear toward the examiner; have him close the ear furthest from the examiner by placing the finger over it, then let him repeat aloud the words or numbers spoken in a conversational tone by the examiner and record the distance in feet at which they can be repeated correctly. Have him turn the other ear toward the examiner and repeat the test.

Candidates for employment will not be accepted unless able to hear ordinary conversation the full distance of 20 feet.

No candidate for promotion or re-examination can be considered to have sufficient acuteness of hearing who is unable to repeat, with his eyes closed, words or numbers spoken in an ordinary conversational tone of voice at a distance of 10 feet.

9. Re-examinations for acuteness of vision, color perception and hearing shall be made at periods of not less than ——— * years.

10. If upon re-examination for acuteness of vision, color perception or hearing an employe who has been at least ——— * years in the service, shall fail to pass the prescribed tests, if he so desire, he may be accorded a field test under service conditions. If he is able to pass the field test successfully, and upon the approval, after examination, by the company's oculist, he may be retained in the service.

OTHER PHYSICAL EXAMINATIONS.

Qualifications.

11. Examinations must develop—
   - *a.* Sufficient strength for the performance of the duties of the position.
   - *b.* Evidence of generally satisfactory physical condition.
   - *c.* Ability to speak without serious impediment.

---

* To be filled in by each road to suit its own requirements.

12. The examiner must record the following on the application blank—

Age,
Height,
Weight,
Complexion,
Color of eyes,
Color of hair,
Race and nationality of the candidate.

13. The ——— * may be required to make the physical examinations to develop the necessary qualifications of candidates as prescribed by Rule 11.

NOTE.—The following recommendations of the Academy of Railway Surgeons are presented as information.

DISQUALIFYING DEFECTS.

1. Applicants with trachoma or other inflammatory conditions of the eyes or with chronic discharges from the ear are disqualified.

2. Varicose veins of both legs, or marked varicosity in one leg; phlebitis; skin diseases, especially eczema, or even a strong tendency to it; loss of thumb, or loss of two fingers of one hand, disqualify the first class (Class A), and station baggagemen and switch tenders in the second class (Class C), while crossing flagmen, agents, operators, section foremen, bridge foremen, watchmen and railroad crossing flagmen, may be accepted with loss of thumb or loss of two fingers of one hand. Hernia disqualifies both classes.

3. Unmistakable evidence of chronic alcoholism disqualifies both classes.

4. Acute gonorrhœa and the primary and secondary manifestations of syphilis, traumatic and pathologic bubo, disqualify both classes as long as the symptoms are apparent.

5. Orchitis; epididymitis; hydrocele; undescended testicle; malignant tumors; recurring appendicitis; old depressed fractures of the skull, or any fracture followed by head symptoms; spinal injuries; epilepsy; antero-posterior curvature; severe injuries of the back; tuberculosis; marked scrofulous cachexia; aneurism; necrosis; acute and chronic cystitis, disqualify both classes.

6. Synovitis; arthritis; floating cartilage and impaired mobility of joints disqualify the first class and all of the second class, except agents and operators, who may be accepted if inflammation has long since subsided and the affected joints be free from pain.

7. From a medical standpoint, diabetes; chronic rheumatism and gout; chronic diarrhœa; chronic hepatic disorders attended with jaundice or those that are disabling in their nature; hepatic, cardiac or renal dropsy; asthma; hæmoptisis; tuberculosis; valvular disease of the heart; angina pectoris; evidences of organic disease of brain or spinal cord; insolation; inveterate neuralgia of the larger nerves, disqualify both classes.

8. No applicant who has lost an arm, leg or hand shall be accepted for any position whatever except by special arrangement with the Superintendent, Claim Department and Chief Surgeon.

9. Under the head of disqualifying defects, surgeons will be careful to note any physical defects that would impair the usefulness of the applicant; that would be more or less aggravated by the service, or that would contribute to the prolongation of disability in case of injury.

---

* The Company's surgeon or medical examiner.

10. In order to prevent fraud in subsequent claims for personal injury, a careful record must be made, in the proper place, of physical defects which do not impair the usefulness of the applicant; that would not be aggravated by the service or that would not contribute to the prolongation of disability in case of injury.

11. In case the applicant does not furnish a certificate that he has been successfully vaccinated within three years, he should be vaccinated.

EDUCATIONAL EXAMINATIONS.

QUALIFICATIONS.

14. Examinations of candidates for employment as enginemen, conductors, train baggagemen, flagmen, signalmen, signal repairmen, telegraphers and bridge and track foremen, or of employes selected for promotion to those positions must develop—

a. Ability to read.

b. Ability to write.

c. Knowledge of the primary rules of arithmetic when the duties of the position require their use.

d. Evidence of necessary intelligence, and sufficient knowledge of the language used in the rules to clearly understand their meaning.

METHOD OF EXAMINATION.*

15. The candidate will be required—

a. To read aloud:
1st. From book of rules.
2d. Written matter in various handwritings.
3d. Time from time-table.
4th. Time from a watch or clock.

b. To write:
1st. Names of various occupations of railroad service.
2d. Names of some of the stations on the road, and the time some train arrives at those stations.

c. To work given examples in:
1st. Addition.
2d. Subtraction.
3d. Multiplication.
4th. Division.

d. To indicate intelligence and knowledge of language by:
1st. Replying, either orally or in writing, to questions of a general character.
2d. Explaining the meaning and application of one or more rules prescribing the duties of the position sought.

---

* Any of these tests may be omitted when known to be unnecessary.

Form (A).

LONDON AND PARIS RAILWAY COMPANY.

APPLICATION FOR {Employment as / Promotion to} .....

1. Name in full.....
2. Date of birth.....Place of birth.....
3. Name of wife, if living (if unmarried, so state).....
   Residence..... .....
   (City, street and number.)
4. Name of father and mother, if living.....
   ..... Residence .....
   (City, street and number.)
5. If unmarried and parents are not living, name and address of nearest relative.....
6. Names and addresses of any persons dependent on you for support or to whose support you are contributing.....
   ....
7. Give record of your services for last five years, giving each year in regular order down to date. State what railroad experience, if any, you have had, giving names of roads, in what capacity employed and length of service on each road. If you have not previously been employed by a railroad company, state by whom, when, where and how employed.

Name of Railroad or other Employer.	Town or City at which Employed.	Name of State.	Present address of Employer.	What was your Occupation?	Date you entered their Ser.	Date you left their Service.
.....	.....	.....	.....	.....	.....	.....
.....	.....	.....	.....	.....	.....	.....
.....	.....	.....	.....	.....	.....	.....
.....	.....	.....	.....	.....	.....	.....
.....	.....	.....	.....	.....	.....	.....
.....	.....	.....	.....	.....	.....	.....
.....	.....	.....	.....	.....	.....	.....

8. Have you ever been injured? If so, when and at what place?
   .....
   How did it occur?.....
   Extent of injuries.....
9. Do you use intoxicating liquors?.....
   If so, to what extent?.....

ADDITIONAL QUESTIONS TO BE ANSWERED BY CANDIDATE FOR EMPLOYMENT.

10. If employed at present, by whom?.....
    No.....Street....., Town or City....., State of.....
    In what capacty are you employed?.....
11. If not employed at present, why did you leave your last place?..... .....
12. Have you ever been in the employ of the.....
    (London & Paris).....Railway Company before? If so, state when, in what capacity, on what Division, and cause of leaving.....

13. Have you ever before made application for employment and been subjected to a physical examination?.....
If so, when.....where.....and by whom was examination made?.....
Were you accepted or rejected?.....
14. My hearing is....., and eyesight....., and I..... able to distinguish colors.

ADDITIONAL QUESTIONS TO BE ANSWERED BY CANDIDATE FOR PROMOTION.

10. Date of entering this company's service.....
11. Present position.....
12. What previous examinations have you been subjected to and what were the results?.....
.....

Sign here.....
My present address is.....
Dated at.....this.....day of.....19....

NOTE.—The answers to the foregoing questions must be in the handwriting of the candidate for employment or promotion and must be signed by the candidate in the presence of the Examiner.

EDUCATIONAL TEST RECORD.

(To be made by Examiner.)

Of.....Candidate for.....*
as .....on .....Division
He is.....a graduate of.....having taken the.....course.
He attended.....school.....years, studied.....
.....advancing as follows.....
In reading, writing, arithmetic and knowledge of the language used in rules he is.....qualified for the position sought.
In general mental characteristics and bearing he is.....

(Signature).....
Examiner.

PHYSICAL TEST RECORD.

(To be made by Examiner.)

Of.....candidate for.....*
(Name to be written here by the candidate in the presence of the Physical Examiner.)
as..... .....on..... .....Division.
Age.....years. Height.....feet.....inches. Weight.....lbs.
Complexion.....Color of Eyes.....Color of Hair.....
Race and Nationality.....

* Employment or promotion.

ACUTENESS OF VISION		COLOR PERCEPTION	HEARING	
CARD TEST.	READING TEST.	Record "O.K." also "P." or "H." on each line for prompt or hesitating; or, if the candidate is rejected, show the numbers of skeins incorrectly selected.		Conversation
Right Eye, $\frac{20}{\quad}$		*For Green*	*Right Ear.*	... *feet*
		For Rose		
Left Eye, $\frac{20}{\quad}$		*For Red*	*Left Ear,*	.... *feet*

Rate of Pulse .....*of Respiration* .....

	NAME.	DATE.
What diseases has he suffered from?	.....	.....
	.....	.....
	.....	.....
	.....	.....

Has he ever suffered from hernia?.....What form?.....

Its present condition?.....

Has he ever suffered from injury?....If so, what and when?....

Is he the subject of any deformity, from injury or otherwise?.....

If so, note here and on skeleton diagrams opposite.....

Has he any present source of disability in (Applicants should be stripped for this examination. Note with care varicose veins, enlarged joints and anything tending to produce or prolong disability.)

Heart ..... Joints .....

Veins ..... Feet and Legs.....

Hands and Arms.... Spine .....

Lungs .....

Does he use intoxicating liquors?.....

Is his appearance that of a temperate man?.....

Has he had small pox.....or been recently vaccinated?.....

He is physically a { First-class / Average / Defective } subject for position as.....

(Signature).....

Examiner.

Examined at.....

Date.....19....

REMARKS.

(Anything lacking space above should be added here.)

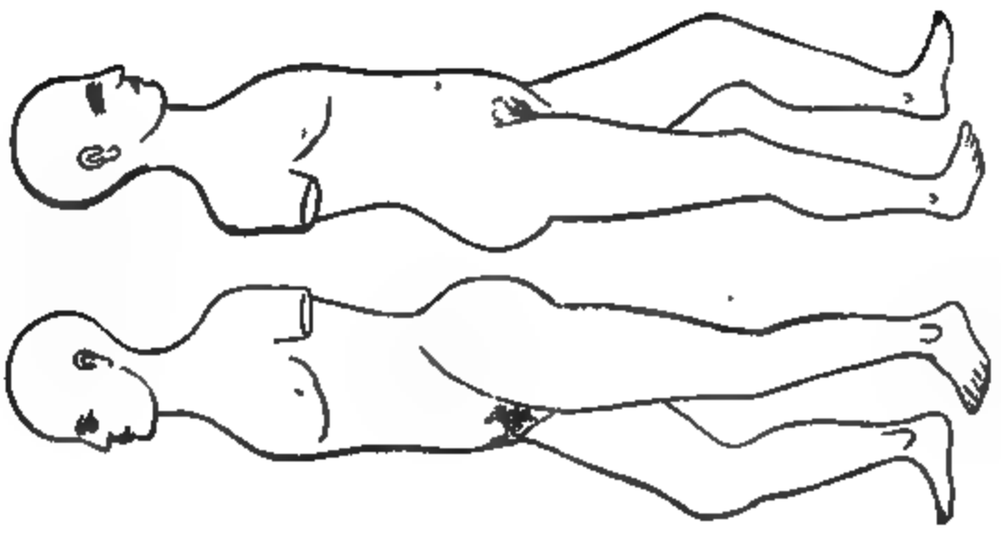

☞ Locate any defects or deformities on the above diagrams.

Water closets, privies, drains and sewers must be kept clean and disinfected.

Passenger cars must be heated, ventilated, cleansed and disinfected under well considered rules.

Drinking water must be guarded from contamination.

Clothing, linen and upholstery must be cleaned, aired and, when necessary, disinfected.

Passengers afflicted with contagious diseases must be properly quarantined and such other steps taken to prevent the spread of disease as may be necessary.

The subject is a scientific one and far-reaching withal. I point out its importance here merely.

It receives more and more the earnest thought of railway managers. Many companies think the matter of sufficient importance to justify a bureau whose sole duty it is to look after the matter. The subject is a growing one. Each day sees some advance in our methods and appliances.

Thus, the primitive way of ventilating cars by opening windows is, little by little, giving place to scientific contrivances; the dangerous and otherwise objectionable car stove gives way to steam or hot water; the oil lamp to gas or electricity, and so on. The service is in a transition state. However, this will doubtless always be its condition. The striving for something better will never end as long as men have brains and can make money by utilizing them. The appliances of to-day, which seem very fine to us, will be supplanted by something better to-morrow.

The aim of owner and manager, here as elsewhere, is perfection, so far as revenues render this possible.

CHAPTER VI.

REGULATION OF TRAINS.

The machinery by which trains are managed is a subject of more or less speculation, even to railroad men. The secrets of the time table or schedule by which they are moved are profound, and to many impenetrable.

How officials handle trains, how watch them as they wind in and out, how adjust so nicely the time of their arrival at meeting points, how keep them all in motion, regulate their speed, and give to each the exact consideration its importance merits, are questions only a few fully understand. We know that somewhere there is a mysterious chart, on which at intervals the superintendent works; that upon this he fixes the time trains shall start, when they shall reach their destinations, their character, speed, stopping places and meeting points. Some of us have had surreptitious glimpses of this wonderful chart through partly closed doors, but our view has been obstructed and our faculties of observation clouded by the presence of the austere superintendent, who paces the room with measured stride, or bends over his work, pencil in hand, with absent air and corrugated brow, like one

who struggles with a problem dire and difficult. We have noted with awe the hieroglyphics, pregnant with meaning, covering the broad, white surface of the mysterious chart; the stations printed in big, fat letters of varying size, and evidently deriving a good deal of importance from that fact; the broad lines of different colors that traverse its face; the faint, irregular lines running here and there, seemingly without object, beginning and ending in space, feeble, inconsequential and indefinite, like disconnected dreams or half completed thoughts. While we surmise that these faint lines forecast trains (organized, harmonious and forceful action), and that each line represents a completed idea, we do not know how these ideas, clothed in this symbolical language, are to be arranged and grouped in the printed schedule.

Sometimes twine or thread of different colors is used in making up the table of trains, instead of pencil marks. In such cases one color may stand for a passenger train, another color for a freight train, and so on. If the track is used by trains belonging to different companies, still other colors may be used. In preparing the chart, a large sheet of drawing paper is stretched on a smooth surface and mounted. The chart is ruled with horizontal lines, each line representing a station or siding, the name of the station or siding being printed at the end of the line. Heavy, perpendicular lines represent the hours, the number of the hour being printed at the top of each line. Thus, twelve at midnight will be

marked at the top of the first perpendicular line, the twenty-four hours following in their order. Between the hour lines ten-minute intervals will be indicated by lighter lines, and between these again five-minute, two-minute or one-minute intervals, as may be desired. A passenger train, we will say, with a running time of thirty miles an hour, leaves one terminus of the road (New York, for example) at 9 a. m. A red thread represents it. This thread is attached to a pin which is inserted in the horizontal line for New York at the 9 a. m. mark. If the train runs without stopping for fifteen miles, another pin is inserted in the line representing the station at which the first stop is made at 9:30 a. m. If the train stops at this station ten minutes, another pin is inserted in the same station line at the crossing of the line representing 9:40 a. m. The thread is stretched along the station line to this and again fastened, then stretched to the next stopping place, and so on. All trains are indicated in a similar manner. Thus, the time chart when finished looks like a piece of fancy lace work.

While anyone may, without much labor, become acquainted with the charts the superintendent uses in arranging his table of trains, no one can, without long association with his duties and responsibilities, understand the nice distinctions that govern him in his work. The schedule, however, presents many features that never change, or at least seldom. Thus, certain passenger trains are like the staple articles the grocer keeps, whether profitable or not. The most triv-

ial change in their organization or time precipitates upon the management the indignation and sharp criticism of the community. Its discomfiture finds expression in petitions, sarcastic newspaper articles, mass meetings, waiting committees and such other devices as seem most likely to stir up the officials.

Aside from this stable feature, the amount and nature of the traffic, its source and direction are governing factors in constructing the time table. All such considerations have to be reviewed over and over again, as new schedules are constructed. It is probable that the movement of freight involves by far the greatest attention upon the part of those having charge of the traffic of railroads, but the passenger business on many lines necessitates the most constant and intelligent thought. The number of passenger trains run is seldom reduced, but new trains are often added, as the business of our railroads is steadily growing. The standard passenger trains move to and fro year after year, almost with the monotony of a pendulum, until they in time come to have a fixed name and character along the route, and people speak of them as they do of the sun and moon or other unalterable things.

Many freight trains also are classed as staple. They comprise those necessary to do the current business of the road. Like passenger trains, they may, at certain seasons of the year, present a beggarly appearance, but as they are necessary to the convenience of the community, they

escape the reductions that overtake other unproductive trains.

Many things that I might mention have to be considered in making a time table. Thus, close connections at junctions with other roads is required by travelers. This phase of the subject tries the patience and ingenuity of officials to the utmost in many instances. All of us feel grateful for being able to make quick connections at the junctions on our route, but few of us stop to realize that this happy circumstance is oftentimes the result of much contention among the officials of the lines interested, of many long and angry communications, great bitterness of feeling, closed finally by concessions and counter concessions. Oftentimes the connection with other lines is made at the end of the road. In this case, as in others of a like nature, it is of the greatest importance that trains shall reach the connecting point at the right minute. When trains shall start upon their journey, however, is largely a local question, to be considered in connection with other local questions.

The economical management of railways requires that the schedule shall provide only for the minimum number of regular trains. Others may be added as business requires. The following illustration shows a diagram of the chart used in making a time card for a single track road. The diagonal lines represent regular trains; the dotted lines a special train, i. e., one not provided for on the time table. The stations opposite where the lines intersect each other represent the meeting

TIME TABLE CHART

The sheet or diagram illustrated below is a chart used in making

points of trains. The diagram should show the time trains stop at stations when the stop exceeds five minutes. The heavy vertical lines divide the time into hours; the lighter vertical lines subdivide the hours into periods of five minutes each. The zigzag line on the diagram represents a way freight, the time being slow and the number of stops frequent, seven hours being occupied in running ninety-five miles.

Trains not provided for by the time card are oftentimes run as sections of regular trains. They have the same rights. When not practicable to run extra trains in this way, their movements are outlined on the diagram, and they are operated under special orders, telegraphic or otherwise.

Trains provided for by the schedule are called regular trains; each has its number; those going in one direction bear odd numbers, those moving in a contrary direction bear even numbers. To know the number of a train is to know its direction.

The relative importance of trains is often indicated by the number given them, as first, second, third, and so on. The schedule fixes the grade of each train, and the rules and regulations forming a part of the time table define its rights. Thus, to illustrate, they provide that passenger trains north bound will only wait five minutes at meeting points in the event trains of the same grade going south are delayed. After that they must proceed on their way, keeping five minutes behind their schedule time, until the belated trains

are met. In the event a north-bound passenger train is delayed, a corresponding train going south is compelled to wait thirty minutes at the meeting point before proceeding. After that it must resume its course, keeping, however, thirty minutes behind its time until it meets the delayed train. The preferences given indicate, relatively, the importance of the traffic.

Trains of an inferior grade are required to keep out of the way of those of a superior grade. Thus if, at a meeting point, two trains of dissimilar grade, the train of superior rank is late, the train of inferior grade must wait indefinitely. The length of time a train must be behind time before it loses its rights as a regular train varies on different roads from eight to twenty-four hours. After a certain time it is not recognized at all and can only proceed under special orders, or in company with some other train.

If a train is operated under special instructions (i. e., pursues its way from point to point as ordered, without reference to the time indicated in the schedule), it is called a "special."* The special trains in motion upon a line are sometimes greatly in excess of the regular trains.

When the business of a road necessitates a temporary increase in the number of its trains, or when delay or accident overtakes those in motion, the telegraph is brought into use to accelerate their movements in America. This phase of the subject I refer to elsewhere.

---

* At one time such trains were called "Wild."

The clerical work involved in the preparation of the time table is considerable and requires the utmost exactness. The work is not difficult when understood, but understanding requires experience. The practices of railways in different countries are very much alike so far as the preparation of their schedules is concerned. An English writer * of note thus describes how a time table is made in Great Britain: "The time tables of the London & Northwestern are printed at Newton-le-Willows. To that town, within a few days of the train alterations having been decided upon by the officers' conference, there repairs a clerk from each of the ten districts, and with these ten clerks comes an official from the office of the superintendent to supervise their labors and assist them with his experience. Taking the minutes of the officers' conference as their guide, the clerks proceed to revise the time table, each working out the time for his own section of the line, but all comparing notes as they proceed so as to insure harmony. As they progress the results of their labors are placed in the hands of the printers, on the spot, and the proof sheets are afterwards revised and corrected by the clerks who have prepared them. No one who has ever glanced with an intelligent eye at the time table of a great railway will be surprised to learn that this operation is one of the most complicated nature, involving great labor and considerable skill. This will be apparent if it be borne in mind that, supposing, for instance, a train run-

* Colonel Findlay.

ning from London to Scotland is altered in its timing ever so slightly, it involves the necessity of altering all the trains running on branch lines in connection with it, and many other trains which are affected by it. A train service is, in fact, like a house of cards; if the bottom card be interfered with, the whole edifice is disarranged, and has to be built up afresh." What Colonel Findlay says of the railroads of his country applies with equal truth to those of all other countries.

CHAPTER VII.

EXPEDITING THE MOVEMENT OF TRAINS.

The skill required to move trains quickly and safely upon a single track is infinitely greater than upon two or more tracks; indeed, the skill required may be said to be in inverse ratio to the number of tracks. Upon a double track meeting places need not be provided, but where there is only one track this is of the greatest consequence and involves, oftentimes, delay of business and other annoyances of a serious nature. Moreover, sidings of sufficient length to enable passenger trains to pass may not be adequate for freight trains. Hence, calculations must be made to arrange the passing places of such trains at points where the accommodations are adequate. Difficulties of this kind in the early history of railroads were very frequent and annoying.

If there are three tracks, provision for trains passing each other (when going in the same direction) required in the case of double track lines is practically obviated. Thus, if a train is to pass another, the forward train pursues its way on the third track, while the fast train following passes it on the main line. It sometimes happens, however, that the third track is

required for use simultaneously by slow trains moving in opposite directions. In such cases, of course, one of the opposing trains must be side-tracked.

With four tracks the manipulation of trains becomes still more simple. It, however, affords abundant scope for the exercise of experience and good judgment. In such cases, trains of the same class follow each other, and only inferior trains are required to give way. Four tracks reduce the danger to the minimum, while facility of movement and economy of operation are increased to the maximum.

With double tracks it would seem as if life and property were secure. Disaster, however, constantly menaces trains following each other, even at moderate rates of speed. "Anyone who has examined our reports of train accidents will have observed that about one-fifth of all those reported are rear collisions."* This statement will surprise those who have not examined the subject, but there can be no doubt of its truthfulness. The danger of rear collisions is constant, and one of the many harassing questions that trainmen have to deal with. The block system and automatic signaling are the most effective means yet devised to prevent trains following each other too closely. In time the danger will be minimized, if not entirely avoided.

The satisfactory movement of trains requires that they shall start at the time specified in the

---

* "Railroad Gazette."

schedule.* If this is impracticable, the schedule should be changed, so that patrons may have so much more leeway. Those who start trains sometimes reason that lost time will be made up before the destination is reached, and so concern themselves less about the matter than they otherwise would. While this may be true, and thus no one greatly inconvenienced in the case of through trains, it is not so in regard to suburban business. The time cannot be made up in many cases, and thus to the inconvenience of being compelled to reach the depot earlier than necessary, there is added the delay at the end of the journey. This is a very serious matter to suburbanites who are compelled, in any event, to spend so much of their time going back and forth. This fact is generally appreciated by railway officials, and, as a rule, the suburban service is carefully looked after.

It is not an impossible task to secure uniform promptness in the movement of trains, if skill and foresight are exercised in preparing the schedule and in carrying it out. Regularity in the movement of passenger trains may be said to be an absolute essential of the service. However, accurate movement of all trains is important. Promptness in this respect is not only a virtue in itself, but valuable to the carrier, as he thereby utilizes to the fullest extent his outlay for wages and equipment.

---

* "Seventeen trains starting between the hours of six and seven-thirty o'clock on the *Blank Railway* were from three to eight minutes late in leaving.''—*Railroad Paper.*

A valuable agency in America for facilitating the movement of trains is the telegraph. It is especially useful when trains are delayed or their movements interfered with. The practice of directing trains by telegraph is a distinct feature of the American service. It is effective and economical, and has been found safe and superior to all other methods. Each year adds to its utility and emphasizes its value. Under its operation a single track may become as useful as a double track under a less facile system. When, for any reason, there is delay, the train arriving at the scheduled point is not required to wait, but is ordered by telegraph to proceed on its way. The telegraph is also effectively used in directing the movements of special trains.

There are three methods of telegraphic dispatching in vogue, known respectively as the "single order," "duplicate order" and "triplicate order" systems. Under the duplicate order system, as its name implies, the order given a train is a copy of the one given to the opposing train. This being so, the order may be sent to the trains affected simultaneously. Under the triplicate order system the order given a train, in addition to being sent to the trains at stations each side of the meeting point, is also sent to the actual meeting point. Upon the arrival of the trains at the meeting point the operator delivers the orders and does not clear his signal until the trains have met. He depends upon his personal observation for proof that both trains have arrived. Under the single order system the

orders to different trains read differently and so mistakes are liable to be made; thus the meeting place may be differently stated in the orders to the different trains. Under the duplicate and triplicate order systems this could not occur, because the dispatcher transmits the orders simultaneously in the same words.

The duplicate and triplicate order systems minimize the telegraphic service and greatly expedite the movement of trains. Moreover, by reason of the orders to different trains being alike, the strain on the dispatcher is less than under the other system.

In moving trains by telegraph the order must conform to certain requirements. Thus, it must be explicit. It must not be encumbered with extraneous matter, but relate solely to the subject in hand. It must be brief, clearly stated and simple. It must be expressed in formulas that everyone understands. It must be confined to one transaction. The recipient of an order construes it literally and in no case as authorizing him to do something not specifically stated. Nor can it be construed to apply to other trains than those specifically mentioned.

Details are all important. Messages must be legibly written; they must be numbered consecutively to permit of their identification; each order must be written on a separate paper; the engineer must be furnished with a place for posting his orders, so that they may be before his eyes while he is attending to his duties; duplicate dispatches must be made simultaneously by

some mechanical process, so as to prevent possibility of variance.

Each step taken in the issuance of an order is noted on the original by the dispatcher. The document thus records on its face its salient features, such as name of person issuing it, names of the operators concerned, time each step was taken, to whom the order was addressed, and so on.

It is desirable that stations should be provided with a device by which the operator can stop a train for which he holds an order without leaving his table. This is usually done, but such conveniences are unknown where the business is carried on along economical lines, as it is in many cases.

Special care is required to avoid delivering orders to one person intended for another. To facilitate this, receptacles are provided, so arranged as to prevent the orders becoming confused. Every person receiving a train order is required by the operator to receipt therefor.

The following steps are taken in transmitting orders: The order is written as received; it is then repeated back by the operator to the dispatcher; the latter responds, indicating whether it is correct or not; the receiving operator acknowledges this response; afterward the order is compared (if it is not copied in manifold) by the person to whom it is addressed, with the copy retained by the operator; the person receiving it then signs his name; this signature is telegraphed to the dispatcher; the latter replies by directing that

the order be delivered. This authorization is indorsed on the order and it is then delivered to the person to whom it is addressed.

The telegraph is an auxiliary merely, not the principal agency for moving trains, and care is taken to avoid using it any more than necessary. The time table is the medium for moving trains; but circumstances constantly occur to render the former inadequate; accidents happen, unforeseen delays occur, the road is blocked, special trains require to be moved; many things in fact occur to render it necessary to supplement the time table with the telegraph.

It is desirable on economical and other grounds, that trains should, so far as possible, have a place assigned them in the schedule and that the number of special trains should be reduced to the minimum. Moving trains from station to station on telegraphic orders (except in the case of delays and extra trains) is a cumbersome method at best and results in more or less confusion and loss of time. Trains thus moved cannot be allowed to follow each other too closely, nor can the margin of time for opposing trains to meet and pass be too greatly circumscribed. Time is lost in other ways. Thus, while the telegraphic movement of trains is valuable in emergencies, it is not so economical as the operation of trains by printed schedules.

While telegraphic movement of trains has been of great utility to our railroads and has added to the convenience and comfort of the public and the profit of owners, it has a drawback in the

fact that it is attended with more danger than the slower and more methodical movement of trains by printed schedules. The risk has, however, never been such as to excite attention nor to offset the great advantages to the public that the system affords.

In Great Britain, where the block system is in general use, train dispatching is practically unknown. The telegraph is utilized, but in a different way. A writer on the subject says:* "By means of the telegraph, trains are started from stations and conducted safely from point to point throughout their journey; the signalmen who regulate their passage are placed in an unbroken chain of communication one with the other; the nature of the train and its destination, and the fact of its punctual running or otherwise, are flashed ahead from signal cabin to signal cabin as it speeds on its journey, while the faithful telegraph warns the signalman if his signals are not acting freely or if his lamps are not burning brightly. By telegraph the marshalling of goods, wagons, the loading of trains and the movements of empty wagons are intelligently controlled, and the whole business of the railway is carried on with a promptitude and despatch that could not otherwise be attained. To insure the principal station masters and inspectors being kept well posted as to the working of the line and the movement of the trains, a most elaborate system is in force for telegraphing the progress

---

* Colonel George Findlay.

of the trains from point to point. For instance, the telegraph clerk at Stafford will telegraph the time of departure of all trains from Stafford, to Crewe, to Chester, to Wolverhampton, to Tamworth, to Warrington and to any other stations at which the information is useful, and this is continually going on all over the line, and from almost every station and signal cabin."

In the United States train dispatching from a central office by means of the telegraph is, as I have intimated, esteemed a necessary adjunct in the management of trains upon the majority of roads. It has reached a state of development that renders considerable experience necessary to understand it properly. The art is, however, in a state of evolution.

Perfection has not been reached and, it is more than probable, never will be. The requirements of the situation are too great and varied. Every day's added experience suggests some new thing whereby the service is bettered.

The telegraph enables the official in charge to view the road as in a mirror. The moving trains present to him the appearance of a vast panorama, in which he holds the magic wand. This officer is known as the train dispatcher.*

He is governed, as I have already pointed out, by well understood formulas, that do not admit of being varied. He must have, it is apparent, the absolute confidence and obedience of the

---

* The duties of the train dispatcher and superintendent are always closely allied; in many cases both offices are filled by the same incumbent.

force. Upon his efficiency depends the good repute of the company; the safety of life and property, and the expeditious discharge of business.

The work of the train dispatcher is so exacting that upon many lines he has no other duties. His office is purposely isolated. In many cases he is a telegraph operator. He is familiar in every respect with the road over which he operates—its distances, gradients, stations, sidings and business generally. He also knows accurately the capacity of every engine, and is generally a man of good judgment and habits. He is assisted by operators especially adapted to their work, who possess generally the same characteristics as their chief.

The duties of the train dispatcher are greatly lessened by the double tracking of a road. However, he is the creature of emergencies; the doctor to be called in when the trains are sick; when the digestive or respiratory organs of the road become clogged. He watches the trains that creep along the line very much as a spider watches the flies that buzz about his web. The moment anything wrong occurs he seizes them and guides them on their way. They obey implicitly what he says. The telegraph is his amanuensis. He is imperturbable when at work. Nothing ever disturbs the equanimity of his temper. His head is clear, his mind comprehensive and his action prompt. Familiar with details, he takes advantage of every circumstance. The rules are at his fingers' ends, and the experience, talents and

characteristics of the men are as an open book to him.

It is an especial duty of the train dispatcher to provide convenient passing places for trains operated by telegraph. Trains are in this way kept in motion that would otherwise lie inactive for hours at a time. The accommodation thus afforded travelers and shippers, no one but those versed in railway matters can fully appreciate.

It is exceedingly difficult for a number of trains advancing upon a single track to move with the regularity necessary to enable them to pass each other on time at the places designated in the schedule. Many things conspire to bring about such a state of affairs; the condition of the track, the load hauled, the efficiency of engines, skill of drivers, character of grades, direction of the wind, nature of the weather, activity of the station force, and finally, the efficiency of conductors and their assistants. The train that moves forward without difficulty at the rate of twenty miles an hour to-day may be barely able to make ten miles an hour to-morrow. All these irregularities are recognized and in a measure surmounted by the skill of the train dispatcher. He advances the trains from point to point without reference to the schedule, the meeting place depending in every case upon the exigencies of the moment.

When regular trains are moved by telegraph, they do not necessarily lose their rights under the schedule, except so far as they may be particularly affected. The moment an order is ful-

filled, or ceases to operate, the train it concerns resumes the fixed rights it possesses under the schedule; if a regular train, it conforms to that instrument; if a special train, it awaits further instructions from the dispatcher before proceeding, or in the absence of that, seeks the protection of a regular train.

Special orders are rarely issued affecting passenger trains, except when they are behind time, in which case the telegraph is brought into requisition to expedite their movements.

When there are a number of delayed trains in motion they are moved by the dispatcher without much reference to the time table. Like the pieces on a chessboard, they move in harmony with his will and are ultimately brought safely to their destinations. He constructs in his mind's eye a schedule for each occasion and executes it with clearness, expedition and safety. Of course, there are degrees of excellence among dispatchers as among other people. The mind of one will be clear and quick to apprehend and execute; the mind of another slow, heavy witted and fatty. The position requires a good memory and the exercise of a nice judgment.

The capacity of a single track road with convenient sidings may be multiplied indefinitely by the skilful use of the telegraph. The statement appended below of the performance of trains for fourteen consecutive days upon such a line one hundred and eight miles in length happily illustrates this. No accident or mishap attended the movement of the trains. The result indicates the

possibilities of a single track line handled by an efficient dispatcher and a well disciplined force.*

The more the movement of trains by telegraph is practiced, the simpler it becomes. This is the secret of its popularity and growth. Through its aid American managers are able to make meager resources accomplish results otherwise unattainable. The system is worthy of study and practice in every country.

The staff system is a favorite means of protecting trains on single track roads in Great Britain. It may thus be described: The road is divided into sections. On starting out, the engineer is given a staff marked with the boundaries of the section it covers. This indicates that he has the right of way on the section in question, and that the track is clear. A second train cannot be started before the staff is returned. On arriving at the end of the section, the engineer hands the staff to a designated person and receives another in due course for the next section, and so on to the end of his run. The staff he leaves is used by the next train going in an opposite direction. Tab-

---

*Total number passenger trains west bound..... 56
Total number passenger trains east bound..... 56
Total number freight trains west bound..... 308
Total number freight trains east bound..... 301
——— 721
Freight cars in west-bound trains.....7,701
Freight cars in east-bound trains.....7,272
———14,973
Average number of cars per train..... 24.59
Average number of trains per day of twenty-four hours 51.50

The load hauled was in every case up to the full capacity of the engines.

lets or tickets supplement the staff when two or more trains are to follow one another in the same direction. All except the last train are given a tablet or ticket. The last train carries the staff. Some companies use tablets exclusively.

Drawbacks to the staff system are the time required to return the staff to the starting point and the consequent delay of following trains; the delivery of the staff by an engineer without being sure that he has the whole of his train; the difficulty of delivering the staff to the engineer without slacking speed; the liability of dropping or losing the staff en route, etc. The value of the staff system has been greatly enhanced by the use of electricity; thus, a number of staffs are provided at the place of distribution. They are placed in receptacles controlled by electrical and mechanical devices, so that only one staff can be withdrawn at a time, and until the staff thus withdrawn is deposited in its receptacle at the other end of the block, another staff cannot be reached or used. By this means the necessity of awaiting the return of the staff is avoided. In the end of the staff a key is placed for unlocking the switches on the block to which it belongs, the lock being so arranged that the key cannot be withdrawn until the switch is reset for the main track and locked. A device similar to that used in America for taking up mail bags without stopping is sometimes used for taking a staff or tablet without slacking speed.

An important problem in the operation of trains is the switching or marshalling of cars. This work, as is known, is performed at junctions and other centers where the business is handled. The work requires systemization, as, in order to secure economical movement of traffic, it is necessary that through trains shall be interrupted as little as possible in their progress. This necessitates the handling of the traffic at intermediate places by way trains, that collect the through business and take it to the junctions and other places where it is classified and made up into through trains. The usual methods of switching and making up trains are well known. Switching and marshalling of trains by gravitation is, however, not so well known, and I do not think I can close this chapter more appropriately than by describing the same in the words of Colonel Findlay, of the London and Northwestern Railway. "The sidings for outward traffic consist of: (1) Six upper reception lines at the summit of the incline holding two hundred and ninety-four wagons; (2) the sorting sidings, twenty-four in number and holding one thousand and sixty-five wagons, into which the wagons, when separated, first run, each siding receiving the wagons for a particular train; (3) two groups of marshalling sidings (called 'gridirons'), through which the wagons of each train are filtered so as to make them take their proper order in the train, and (4) four lower reception lines which receive the trains in their complete state and where the engines are attached to take them away. On the

arrival of a set of wagons in the upper reception lines, the rear brakes are put on, the engine is detached, and then on each wagon is chalked the number of the sorting siding it has to enter. One man carefully inspects the brake of each wagon and calls out the chalked number to a second man, standing below him, who has to regulate the speed of the descending wagons. This second man passes the number on by hand signal to the shunter lower down, who has charge of the switches, and who, by moving a lever, turns the wagon into its proper siding.'' In order to recover wagons or cars than run away or get beyond the control of those moving them, an apparatus is provided, called a chain drag. It ''consists of a heavy iron chain cable placed in a wrought-iron tank between the rails and below their level; a steel hook attached to the cable is fixed in a loose socket at the height of a wagon axle and is worked by a lever which also works a signal. When a train is intended to pass, the hook is lowered by the lever; but if it is desired to stop a wagon, the hook is raised by the lever and catches the axle of the wagon, and the heavy cable attached to the hook being drawn out of its tank, by its weight, when dragged over the ballast, soon stops the runaway.''

CHAPTER VIII.

ACCIDENTS.

The inauspicious happenings that the ancients ascribed to fate or to the intervention of some evil and malignant spirit, we denominate accidents. In this enlightened day we do not care to admit that such things are inevitable or even excusable. Nevertheless and notwithstanding the continued perfecting of mechanical devices and insistence upon discipline, accidents occur and will doubtless continue to occur so long as railways are in operation. Man is fallible, and his devices must always fall short of absolute perfection. Railway accidents are the penalty we pay for abandoning primitive methods of travel; for emancipation from humdrum conditions. Each day's experience, however, makes them more rare, but that they can ever be wholly avoided is improbable.

Railway accidents have, from the first, been the lurid theme of impassioned writers and speakers. It is a favorite metaphor of demagogues, that thousands are thus annually doomed to death because of the grasping avarice of railway corporations. This is, of course, not true, even in part. It is so clearly to the interest of railways to supply every needed safeguard within

their means that this interest will always cause them to do so without extraneous pressure. When a man is run over on the street, or meets with other disaster in the turmoil of business, we recognize it as unavoidable, and pass on. More or less philosophy of this kind must be exercised in contemplating railway accidents. Such safeguards as are reasonable, and within the ability of the carrier to provide, he provides. He would quickly lose prestige with his patrons if he did not. The matter is one to be regulated by good sense and the financial ability of the carrier.

Of all the accidents that occur in connection with the operation of railroads, the collision of trains is the most dramatic. The block system is intended to lessen such accidents, if not prevent them entirely. But upon many American roads the protection of the rear of trains is, of necessity, left to the brakeman. That he, as a rule, fulfills his duty with intelligence and faithfulness there can be no doubt, but the trustworthiness of many employes has never been tried, and whether they will perform their work faithfully or not when the emergency arises is always an open question. That the difficulties of the situation tempt them to slight their work, there can be no doubt; thus, the weather may be bad, the hour unpropitious, the distance great, or the time they must wait such as to tempt them to take undue chances. Everything conspires to render the brakeman unwilling to go back any further than he is compelled in protecting his train. The efficiency of the service

is, therefore, always in doubt. The brakeman's responsibility is fortunately shared with the conductor and the engineer, but this is not enough.

One difficulty of the service is the necessity, oftentimes, of employing untried men. Any great and sudden increase in the traffic of a railroad necessitates this. There is less danger of collison on a road whereon fifty trains a day run regularly than on a line where the service is suddenly increased from twenty to thirty trains a day. The service not only requires experienced men, but men thoroughly familiar with the line over which they run.

Railroad accidents, as a whole, arise from causes beyond the reasonable control of managers. Their attempts to improve the service in this respect are constant and intelligent, and in many cases far beyond the financial strength of the companies they represent. This fact is well known to everyone familiar with the affairs of railroads.

A comparison of the methods followed by railroads of different countries shows that they borrow freely of each other. Each is benefited in this way by the practices of the others. Thus, the English roads have much greater experience than those in America in the conduct of a heavy traffic in a densely populated country. This experience American companies can utilize in many ways, as the problems of such a traffic press upon them more and more.

It is a favorite maxim of trainmen that an ounce of prevention is worth a pound of cure.

Running freight trains too fast is a frequent cause of train accidents upon cheaply built roads. When conditions are not propitious such trains should be run at a very moderate rate of speed. The rules generally contemplate this, but the needs of traffic or the vicissitudes of the service lead to their being disregarded in many instances.

Whenever changes in a service are frequent or laxity of discipline prevails, accidents are frequent. Those familiar with the details of train service have occasion to notice that things forbidden under the rules are oftentimes matters of everyday occurrence. So long as no accident follows, the infringement is allowed to pass unnoticed. In explanation of this, it is claimed, and truly, that the business done on many lines could not be performed if the rules were literally enforced. But the result of this conflict between theory and practice is to weaken discipline; to make men disregard essentials as well as non-essentials. The result finally is disastrous. Necessary rules must be intelligently, uniformly and consistently administered. The occasional discharge of an offender, because a practice which he and his associates have indulged in has at last resulted in disaster, carries little or no weight. The person discharged has no difficulty in securing employment with some other company, where the offense is winked at as before. Moreover, reliance on fear of dismissal as a means of discipline is unworthy an enlightened management. On the other hand, the abso-

lute discipline of military rule is not practicable in the railway service, nor would it be to the benefit of carriers in managing trains or in dealing with the community.

The dealings of railroads with employes, as well as with patrons, are based generally on what is practicable; on business methods. The temper, ambition and affection of men, and the economic laws governing affairs, are never lost sight of.

In judicial notice of railway accidents, the inclination of judges and juries is, in general, to place a charitable construction on the acts of employes. They remember that it is human to err; that perfection is a divine attribute. There is, however, a growing disposition to hold railways to a more strict account for acts whereby persons are injured or killed. This has gone so far, in some cases, as to lead to the imprisonment of employes. It may go still further. It is to be regarded as evidencing a determination to compel trainmen to meet the requirements of every emergency. This disposition is to be deplored, but it is a progressive step and one that, while fraught with more or less present hardship, will redound finally to the good of the service. The equities of particular cases should, however, never be disregarded by public prosecutors.

Want of care and observance of necessary precautions upon the part of the public is a noticeable feature in the operations of trains. To these are attributable a large percentage of the accidents that occur. In America the laws

in this respect are exceedingly remiss, and such as we have are not faithfully enforced. Thus, men get on and off the cars while in motion, trespass upon the track of railroads, contrary to the statutes, and when accident overtakes them the public does not condemn the individual but the carrier. If the latter ventures to arrest a person for getting on or off a moving train, or who is found trespassing upon railroad property, the magistrate releases him with a gentle reprimand. When the courts send men to jail or fine them for disregarding the just rights of railroads in this respect, offenses will cease, but not until then.

But few people are killed or injured at the grade crossings in Germany, although such crossings are as numerous as in America. The reason is that the laws made to protect the public in such cases are enforced. Anyone there who should attempt to cross a track when the signalman has warned him back would be fined or imprisoned.

Because of the newness of the country and the poverty of carriers the American railroads were far behind those of Europe in providing station precautions. Fewer people are killed and injured by the railroads, relatively, in England than elsewhere. There, however, carriers have gone to the other extreme in adopting precautionary measures, with the result that great sums have been sunk in safety appliances which should have been used to provide facilities for handling traffic. Vast amounts have thus been expended

for tunnels, overhead bridges and in the introduction of the block system upon lines having little or no business, that might better have been left unexpended, because the outlay has circumscribed needed expenditures in other directions. The comfort and necessities of a people as a whole are all-important. Every dollar added unnecessarily to the cost of constructing and operating railroads is so much taken from the common fund. A happy mean should be observed. In the matter of safeguards it is to be found in the calm, dispassionate co-operation of the state and the carrier in providing such precautions as general needs justify. Carriers, if left to themselves, will do this from self-interest and will not abuse the trust, nor will they sacrifice material interests in vain efforts to attain theoretical ends.

A man may travel in America fifty millions of miles without being killed, or twelve million miles without being injured. This risk, small as it is, is greater than in England or Germany, but it is much less than the risk incurred on the streets of a city.

While the precautions that railways adopt to prevent accidents at stations and elsewhere are each year more complete, the most effective preventive of all is the growing knowledge, intelligence and experience of the community.

The easy approach to the tracks of railways in America and the indisposition of the courts to enforce the regulations of carriers, as sanctioned by the statutes, greatly increase the number of

casualties. Generally, it may be said that absence of necessary safety appliances on American railroads has not arisen from lack of appreciation, but from lack of means. When roads only render a bare return upon the investment, owners cannot be expected to provide precautions against ordinary casualties from their private means.

In the operation of railroads, complete freedom from danger, it may be truthfully said, can only be secured by expenditures entirely beyond the means of the wealthiest corporation.

Railway experts have made the assertion that notwithstanding the safety appliances installed by the railways in recent years, the improvements in track and equipment, and the increase in wages paid, the percentage of accidents is higher, has increased in greater ratio than the percentage of earnings.

It should be remembered that the question of accidents is one of far greater importance to the railway employe than to the public, for upon the employe falls the major part of the fatalities and injuries resulting from accidents, and it may also be noted that upon the railway companies falls the immense financial drain as well as loss of prestige and the public criticism that follows mishaps.

The safe operation of trains has been the subject of federal legislation, having in view the safety of employes and travelers upon railways. Such legislation has compelled common carriers, engaged in interstate commerce, to equip their locomotives with power driving wheel brakes and appliances for operating the train brake system so

that engineers can control the speed of the trains without requiring brakemen to use the common hand brakes for that purpose; also, to equip locomotives with ash pans, which can be dumped or emptied and cleaned without the necessity of going under the locomotives, and to equip their cars with couplers coupling automatically by impact and which can be uncoupled without the necessity of men going between the ends of the cars. Such legislation also requires that cars must be provided with secure grab irons or handholds in the ends and sides of each car for greater security for men in coupling and uncoupling cars. Cars must also be equipped with secure sill steps and efficient hand brakes, ladders, running boards and handholds or grab irons on their roofs. The Interstate Commerce Commission is authorized to adopt a standard height of draw bars for freight cars, and their use in interstate commerce when not so equipped is forbidden.*

Federal legislation has also provided that carriers engaged in interstate and foreign commerce must make monthly reports under oath of all collisions, derailments or other accidents, resulting in injury to persons, equipment or road-bed, stating the nature and cause thereof and the circumstances connected therewith. The Interstate Commerce Commission is given authority to investigate all such accidents so reported, and the Commission is required, when it deems it to the public

---

* The prescribed standard height of draw bars is: Standard gauge roads, 34½ inches; narrow gauge roads, 26 inches; maximum variation between loaded and empty cars, 3 inches.

interest, to make reports of such investigations, stating the causes of the accidents and making such recommendations as it deems proper. Such reports are to be made public by the Commission in such manner as it deems proper.

Federal legislation has also limited the hours of working of railway employes who are actually engaged or connected with the movement of any trains, making it unlawful for any common carrier to require or permit any such employe to be or remain on duty for a longer period than sixteen consecutive hours, and whenever such employe shall have been continuously on duty for sixteen hours he shall be relieved, and not required or permitted again to go on duty until he has had at least ten consecutive hours off duty, and no such employe who has been on duty sixteen hours in the aggregate in any twenty-four hour period, shall be required, or permitted, to continue or again go on duty without having had, at least, eight consecutive hours off duty. Operators, train dispatchers, and other employes connected with the use of the telegraph or telephone in relation to the movement of trains, may not be required, or permitted, to be on duty for a longer period than nine hours in any twenty-four hour period in towers, offices, places and stations continuously operated night and day, nor for a longer period than thirteen hours in towers, offices, places and stations operated only during the day time, except in cases of emergency when they may be permitted to be and remain on duty for four additional hours

in a twenty-four hour period and not exceeding three days in a week.

Further, federal legislation has surrounded the transportation, in interstate commerce, of explosives and other dangerous articles, with restrictions; thus it is forbidden to carry dynamite, gunpowder, liquid nitroglycerine, fulminate in bulk in dry condition or other like explosives on passenger vehicles; packages containing explosives must be plainly marked by the shipper on the outside, denoting the contents. The Interstate Commerce Commission is required to prescribe regulations for the safe transportation of explosives. This law is highly penal, providing for imprisonment of not more than ten years if death or bodily injury occurs to any person if the law is ignored.

Railway accidents may be divided into four classes as follows:

First. Unavoidable accidents, or those caused by the act of God, the public enemy, or by some miscreant who takes up a rail, misplaces a switch, or puts an obstruction on the track.

Second. Accidents to passengers, outsiders trespassing or not trespassing, caused by the carelessness or wantonness of the injured or some other person for whose act the railroad is not liable, or by the failure on the part of the state or municipality to make and enforce proper laws and ordinances to prevent stoning trains and trespassing on the premises and cars of the companies.

Third. Those caused by the want of care, foresight, or supervision on the part of the management.

Fourth. Those caused by the carelessness, thoughtlessness, or neglect of employes, i. e., by disregard or disobedience of rules.

Neither railway companies nor their employes can be held responsible for accidents under the first and second classes. The proportion of accidents coming under the third class is comparatively small. Self interest alone forces the management of railways to the exercise of care, foresight and supervision in the operation of trains.

The large majority of all accidents that happen are outside of the first three classes and fall under the fourth class, namely: those caused by the carelessness, thoughtlessness and neglect of employes.

It is manifest that the perfection of mechanical appliances will never be a complete preventive of accidents. Railway managers who have studied the subject closely and have had long experience in operation lean to the conclusion that the employe, the man, must be looked to for relief. In pursuing such a policy the railway manager will seek to find for the service, good, competent, careful and sober men; he will seek to adopt such rules as will tend to keep incompetent and careless men out of the service. He will see that the track and equipment are kept as perfect as may be and always intelligently inspected so that inherent or developed defects may be discovered quickly. He will formulate rules and regulations that will fully educate the employe in a knowledge of his duties and responsibilities; and will exercise the most rigid supervision.

Injuries to passengers and others for which employes are at fault arise principally from collisions, derailments and improper handling and management of trains and stations.

COLLISIONS: Collisons are caused often by reckless disregard of signals or by foolhardiness—taking a chance when the signals cannot be seen from fog or other causes—instead of observing the fundamental rules of train operation.

In case of doubt adopt the safe course.

Speed must always be sacrificed for safety.

SWITCHING CARS CONTAINING PASSENGERS WITHOUT THE ENGINE BEING ATTACHED TO CARS: This practice is expressly prohibited, yet it is indulged in at times by men who have long been in the service. Ninety-nine times in one hundred no disaster happens; it is the hundredth time that costs many times over the time saved before.

CARELESS LOADING AND UNLOADING OF FREIGHT UPON MIXED TRAINS: Specific rules govern the loading and unloading of cars. It would seem self-evident that timber or telegraph poles ought not to be unloaded from moving trains carrying passengers or from any moving trains, yet that has been done with disastrous results. Many accidents are also caused by logs, water pipes, machinery or other property liable to fall from cars not being properly secured to the car. Accidents occur to patrons, and their property is damaged, by careless handling of cars on tracks on which other cars are placed to be loaded or unloaded, whereby occupants of cars while loading the same are thrown down and injured and prop-

erty is damaged through other cars being switched down against them.

RECKLESS RUNNING: Instances have been known where, notwithstanding orders to run slow over a track being repaired, down hill or around curves, the precaution has been disregarded with disastrous results.

FAILURE TO STOP TRAINS LONG ENOUGH TO ALLOW PASSENGERS TO GET ON AND OFF: Accidents from this cause are not rare and unfortunately often happen to the old and infirm or those unable to take proper care of themselves.

Serious results, it would seem, may happen from the most trivial causes. For instance, passengers will be injured by falling car windows; from the starting of a train too quickly to allow them to seat themselves; from parts of the engine being carelessly screwed on becoming detached and striking passengers on station platforms; from failure to stop trains at the platforms of stations; from passengers falling over packages left in the aisles, etc.

ACCIDENTS TO PERSONS CROSSING TRACKS AT HIGHWAYS: This is a most fatal class of accidents and of increasing frequency caused by the increased number and speed of trains, multiplicity of tracks and the growth of the population. It often happens that such accidents are caused by failure to give the required signals on approaching crossings; by freight trains passing through stations at a prohibited speed; by failure of gatemen and flagmen to perform their duties; by headlights having been extinguished without the

knowledge of the engineer, especially when there is snow on the ground. The great contributing cause may be said to be the failure of the persons crossing the tracks to exercise ordinary caution.

The frequency of grade crossings is due to the fact that the United States is a comparatively new country and many roads could not have been built had the cost of overhead bridges or tunnels been added. The grade crossing has entailed hardships both on the carrier and the community. It is impossible to prevent accidents thereon, every crossing invites them and while the abolishment of the grade crossing may be demanded, it is, at least in this day, impracticable to do without it. The owners and managers of railways are fully alive to the advantages to be derived from the abolishment of these crossings and it may truthfully be said that as fast as their resources warrant it, changes are gradually and continually being made.

TRESPASSING: Accidents from this cause are frequent and while they cannot be laid at the door of train operatives, they may quite often be avoided by greater care and watchfulness; by warning trespassers of the approach of trains; by sounding the whistle; by slowing up, or by stopping the train.

CARS PROJECTING OVER HIGHWAY CROSSINGS: Cars left in such a position are very apt to frighten horses and cause them to run away. The laws of the land and the rules of the railways prohibit it. The stoppage of trains with the rear car standing on the highway, should also be avoided, particularly in the winter time, when there is always

more or less steam leaking from the hose, which is likely to frighten horses waiting to get by.

LEAVING TURNTABLES UNLOCKED: Children are frequently injured from this neglect. They are attracted to the turntables and if unlocked seek to manipulate them often with disastrous results to themselves.

PLACING TORPEDOES: Torpedoes not properly attached to the rail as required by the rules or placed on a rail in a highway are apt to be picked up by children as playthings to their probable injury.

FIRES: Fires started by sparks. These can be minimized if attention is paid to firing and to the condition of the netting and ashpans of engines.

ACCIDENTS TO EMPLOYES THROUGH THE CARELESSNESS OF OTHER EMPLOYES: As in the case of passengers, the majority of accidents to employes arise from collisions which, as has been noted, are most frequently caused by reckless disregard of signals and failure to observe the rules governing the movement of trains.

ACCIDENTS TO EMPLOYES CAUSED BY THEIR OWN CARELESSNESS: Some of the most common accidents of this class occur in coupling cars; getting on or off cars; falling from trains or engines, moving or standing; being struck by overhead obstructions; crossing or going between moving cars or passing in front of moving cars or engines; leaving cars too near a switch to clear a man on a car on the next track; going under cars to repair them or under engines without putting out a flag; cutting steam hose without first knowing that the

steam is turned off; or oiling hot boxes while the train is in motion.

In all these cases the results are attributable to carelessness, thoughtlessness or recklessness. In many instances the recklessness is in the face of precautionary measures.

DERAILMENTS: Derailments generally result from running into open switches, off derails, or too fast running at bad places in the track. Nearly all of these cases can be avoided by careful running and by compliance with the rules. Occasional derailments also occur from minor causes, such as a brake-shoe on the tank of an engine coming off —the brake-shoe having an old defect which should have been discovered by inspection.

DEFECTIVE EQUIPMENT: The majority of accidents caused by defective equipment come under the fourth class, mentioned in the early part of this chapter, because if the rules had been carefully observed, the inspection of such equipment would have brought to light the defects in the cars or engines, which caused the disaster.

This emphasizes the need of the most rigid inspection and supervision. If the rules were observed defective running boards, handholds, ladders and brakes would be discovered and the cars set out; defective couplers which cause the breaking of trains in two would be discovered; air hose that was old and at the bursting point would be noticed, and so on.

The same is true of engines; were their inspection rigid and intelligent, defective grate-shaking rigging and defective shoveling sheets would be

discovered and eliminated, imperfect appliances, which cause accidents would be rejected or repaired.

The following specific rules and regulations are commonly prescribed by railway companies in relation to accidents:

INSTRUCTIONS IN CASE OF ACCIDENTS.

1. Whenever passengers or employes are injured everything should be done to care for them properly. The company's nearest surgeon should be called to treat them; if prudent, they should be moved to the nearest place at which the company has a surgeon and left with such surgeon for care and treatment. If the injury be serious, the nearest competent surgeon obtainable should be called to attend until the company's surgeon arrives.

2. Whenever an accident happens to any train on which passengers are carried, whether collision or derailment, of whatever nature, on main line or siding, or within the yard limits where trains are reconstructed, conductors should report on a form provided for that purpose, and noting opposite each name what injury, if any, the passenger received. Conductors, after making everything safe, should give their undivided attention to the care and comfort of their passengers, especially to those who are injured. Bedding and linen may be taken from sleeping cars for this purpose, the conductor keeping a careful account thereof and seeing to its return; when deemed necessary, injured persons may be put in the sleeping cars. When a number of persons is injured, the service of competent surgeons in the vicinity should be at once secured, and every possible effort made to care for the injured, the company's surgeon in each direction being notified by telegraph or telephone to come immediately to the place of the accident.

3. When persons (other than employes) by reason of climbing on or jumping from moving trains, or walking or lying on the track, are injured, they should be sent to their homes or placed in charge of the local city, village or township authorities and no expense incurred on the part of the company in the matter.

4. A report of all accidents should be sent immediately to the proper officials by the conductor, engineman, agent, yardmaster, foreman or person in charge, by telegraph, using a form provided for the purpose, giving the names of the injured persons and witnesses, the extent of injuries and the names of the owners of the property damaged and the extent of the damage, and as soon as possible a full detailed report made on a form provided for that purpose and forwarded to the proper officials, a separate report being made for each person injured. If the person injured is an

employe he should also make and sign a statement of facts in relation to the accident in his own handwriting on the same form; should he be unable to write, the statement should be written at his dictation, and after being read over to him he should sign it by making his mark, the person writing and reading the statement signing same as a witness.

5. Whenever an employe, whether on duty or not, witnesses an accident in which a person is injured or property damaged, in which the company is in any way concerned, he should report it immediately on a form provided for that purpose. Every effort should be made to procure the names and addresses of all persons, particularly outsiders, who witnessed the accident, especially when persons are injured within the corporate limits of any city, town or village, or when crossing the tracks at a public highway.

6. When an accident occurs on an engine, or is caused by an engine striking any person, or conveyance, or when cars are being coupled or uncoupled, a full report should be made by the engineman on a form provided for that purpose, as well as by the conductor or the person in charge of the train.

7. When persons are injured while coupling or uncoupling cars or in getting on or off cars, whether passenger or freight, or in any other way, in which the accident may have been caused by defective appliances or machinery, the cars or appliances should be immediately examined by the person in charge or by the agent, to ascertain their condition, and report made of the inspection on a form provided for that purpose, giving the numbers and initials of cars examined and the names of the persons making the inspection. The inspector at the first division terminal will also examine the machinery, cars or appliances, and make a report on same form. When an accident is caused by defective machinery or by the breaking of machinery, tools, appliances or rails, the broken or defective parts should be so marked as to be readily identified and immediately turned over to the proper officials.

8. When an accident occurs which results in the death of any person, the remains of the deceased should be carefully conveyed to the nearest station building, care being taken not to remove the body outside the limits of the county and state in which the accident happened. The agent at such station should then notify the proper official by wire, as well as the family or friends of the deceased.

What to do for those injured or seriously ill—First Aid.

9. To be of help, keep your head.

10. Remove injured person from the wreckage, using the utmost care not to further injure him.

11. STRETCHERS. In removing injured persons great care should be exercised to avoid further hemorrhage. To put injured person on stretcher, use three persons if possible, with injured person between the stretcher and those lifting. One should lift under the head

and shoulders, another under the hips, and the third the legs. If regular stretcher cannot be secured, use a grain door for that purpose, or caboose cushions, or a couple of boards covered with blankets or coats. In walking with person on a stretcher break step; do not keep step.

Whenever a stretcher is used for any purpose, the employe responsible for same will arrange for its prompt return; advising the proper official of its use.

12. Keep the crowd away, so as to insure plenty of fresh air.

13. Examine the injuries carefully before doing anything.

14. Don't touch open wounds with the hands, nor attempt to remove dirt, nor apply unclean dressings of any kind, as infection may be introduced by so doing.

15. First Aid Packets (packets put up by the American Red Cross) should be kept on hand on trains and at other places where they are likely to be required. The first aid packets contain: two aseptic compresses wrapped in oil paper, one cambric bandage, one triangular bandage, and two safety pins. In dressing wounds place the compress on the wound without touching that part which comes in contact with the wounded surface, secure with the cambric bandage, and, if necessary, wrap the whole with triangular bandage. This latter can be also used as a sling and to secure splints. If the contents of one packet are insufficient, use more.

16. HEMORRHAGE. To arrest hemorrhage, place compresses on the bleeding part and secure firmly with the cambric bandage; if bleeding continues, apply more compresses and more pressure until bleeding ceases. If this fails, tie a bandage around the limb between the point of hemorrhage and the body, and twist tightly with a stick until bleeding stops. Then secure bandage.

17. FRACTURE. Broken bones should be treated with splints, the splints secured in position by triangular and other bandages. The splints should reach from below the lower joint to the one above the fracture. Folded newspapers, pieces of board, heavy pasteboard or anything sufficient to prevent movement of the broken ends of bones upon each other will answer.

18. BURNS. Burns should be treated in the same manner as wounds. Do not forcibly remove clothing; cut the clothes away, if necessary. Where there is much pain, common baking soda dissolved in water may be used to saturate bandage. Don't use preparations of oil, as they are liable to cause infection.

19. SHOCK. Shock is a condition of almost complete absence of the signs of life, such as sighing respiration, pale cold clammy skin, etc. Don't give whiskey, or any other stimulants, or drugs; the principal requirements are internal and external heat by means of hot coffee, hot milk, and other hot drinks, and the application of heat by means of blankets, hot water-bottles, hot bricks, etc. In cases of apparent drowning and electrical shock, use artificial respiration.

20. UNCONSCIOUSNESS. Persons unconscious from any cause should be removed to a quiet place and laid upon the back. Keep every one away and let plenty of air get to the sick person. Loosen the clothing about the neck and abdomen. If the conditions are like shock, use same treatment.

21. FITS. A person suffering from a fit should be kept quiet, on the back. Loosen the clothing about the neck and abdomen, and be careful he does not injure himself while in the fit.

22. HEAT EXHAUSTION AND SUNSTROKE. In the former the skin will be cold and clammy, and the conditions will be same as shock; the same treatment will be required. In cases of sunstroke the body feels hot to the touch; is dry. Apply ice to the abdomen, head and other parts of the body by rubbing with pieces of ice or cracking the ice and putting it in cloths over the parts named above.

CHAPTER IX.

SAFETY APPLIANCES AND THEIR PRACTICAL USES.*

The community, including the bulk of railway men, agree in designating certain appurtenances of railroads as safety appliances, overlooking in that connection others much more important. The reason is, the former were introduced coincidentally with or to meet public clamor, while the latter were not.

A noticeable thing in connection with the safety appliances of railroads is that they in general facilitate the movement of trains as well as protect them. While the public does not, perhaps, place an exaggerated estimate on the importance of what it designates as safety devices, it ignores the efforts that have been made in other directions having the same object in view. When a train is hurled from a high embankment or plunges through a bridge, the occurrence excites horror, but in the majority of cases the mystery which envelops the cause of the accident

* The subject of safety appliances is closely interwoven with that of accidents, and reference is made to another chapter in this book dealing with accidents in which reference is made to federal legislation having in view the safety of employes and travelers upon railways and prescribing certain standard appliances for equipment; the making of reports of accidents, limiting the working hours of employes, surrounding the transportation of explosives and dangerous articles with restrictions, etc.

dulls the edge of criticism. This does not, however, lessen the seriousness of the occurrence in the eyes of railway managers. They do not make the distinction in reference to accidents that the public does. Being responsible for the operation of the road as a whole, they think of it as a whole and act with that view, remembering always the importance of avoiding accidents of every description. Thus, they consider it in reference to the maintenance of the track; to its supervision; to the drainage needed to protect the road from floods, or becoming surcharged with water; to the strength of the rails; to the security with which they are fastened; to the soundness of ties and the care with which they are looked after; to the adequacy of the ballast; to the appurtenances to grade crossings, frogs and switches; to the signals; to the maintenance of bridges and culverts; to properly guarding same, and finally, to the care with which the equipment is constructed, inspected and maintained.

These things, and many others I might mention, are fundamental, and a disregard of them is fraught with danger to life and property. Yet we do not associate them with the so-called safety devices of railroads. Thus, it appears our appreciation of the latter is partial only. Everything connected with the track, as well as with trains, is constructed and operated with a view to the prevention of accidents. Foresight in this respect is fundamental. So much is said about the block system, mechanical coupling of cars, automatic brakes and similar specialties that we forget that

they are only incidents, details in the great panorama.

Many books and essays have been written on railway accidents, mainly to recount their horrors, but partly, as the authors hint, to point out to the public, and to legislators and railway managers, how they may be avoided. In regard to collisions, one and all agree that the block system prevents two trains from being on the same track at the same moment, and therefore prevents collisions. Arguing from this, they lay it down as essential that every company should have a block system. The financial aspect of the subject troubles them not at all.

Essays on railway accidents are always accompanied by tabulated statements of accidents which have arisen from various causes. Their general effect is to lead the reader to believe the subject is not receiving the attention from railway managers which it should. Statistics of this kind, it is to be remarked, are always convincing and nearly always misleading. They are so in this case. It is perfectly well known to every railway manager in the world that absence of prevention is not so much a matter of oversight or neglect as of inability to supply the thing needed.

All writers are not equally unreasonable, but generally they assume that every railroad should be supplied with the block system and with overhead bridges. This, notwithstanding the fact that many companies are only able to pay for

the most primitive and economical train and station service.

Marked interest is evinced by railways in every kind of safety appliance, and, stimulated by this, inventors have been and are making continual progress in such matters. The owners and managers of railways are not more selfish than others, and are interested, the same as the rest of us, in safety appliances on humanitarian grounds.

INTERLOCKING SWITCH: One of the greatest safety devices ever perfected is the interlocking switch. It is also one of the most useful contrivances for accelerating business ever invented in connection with railways. The interlocking switch is worked, as is well known, from a central tower. It is found especially valuable in crowded yards and at railroad crossings and draw-bridges. Through this contrivance the track upon which a train is proceeding is closed to all other trains. Thus, where two or more railways cross each other, if the towerman opens the switch to a train on one road, he at the same time and by the same movement reverses the switches on the other road, so that the trains of the latter will be derailed or diverted in the event they attempt to cross. The interlocking system is operated by levers, to which the switches and signals are connected by rods or wires. The levers controlling all the switches at a junction or station are concentrated in a building from which the signalman has a full view of the tracks. A spring catch rod renders it impossible for him to move any particular switch or signal until all other

switches and signals having any relation to the one he intends to move are locked. The interlocking principle may be applied to any system of levers (so that one lever may be interlocked with any other lever), regardless of the work to be performed. Thus, switch levers may be interlocked with other switch levers, as well as with signal levers. Aside from its use at railroad crossings, the interlocking switch is an effective safety device at draw-bridges. Thus, the draw in opening, by a mechanical arrangement, disconnects the tracks approaching the bridge, so that an engine or train that does not stop (i. e., disregards the signal) is diverted or derailed. The fact that the interlocking device prevents a train from running into an open draw, or into another train at a crossing, renders it unnecessary (as a precautionary measure) for trains to stop when approaching draw-bridges and railroad crossings. Much time is saved in this way. Interlocking is also available for use in connection with highway crossings; in such case the gates are operated by a wheel from the tower and, when closed, are locked by a lever made to interlock with the signal.

Interlocking is a term used to describe appliances for operating switches and signals from a central point. The levers of the apparatus are interlocked with each other. Of this system it is said that if a man were to go blindfolded into a signal tower with an interlocking apparatus he might, so far as accordance between switches and signals is concerned, be allowed with safety to pull

over any lever at random. He might delay traffic because he might not know which signal to lower for a particular train, but he could not lower such a signal or produce such a combination of position of switches and signals as would, if the signals were obeyed, produce a collision. The results of the interlocking principle may be illustrated by the example of a piano or organ constructed in such a way that no notes could be played on it which are not in harmony with each other. The utility and safety of the interlocking system have caused it to be popular in America. In many states of the Union interlocking is prescribed by law for the protection of grade railroad crossings and draw-bridges. Some states require the crossings of electric railways to be interlocked.

There is some difference of opinion as to the use of derails in connection with the interlocking system, for the reason that every derail is a facing switch, and therefore to be avoided if possible. Again, accidents have been occasioned by the levermen changing signals and opening the derail after the train has accepted the clear signal, and therefore too late for it to stop, resulting in throwing it off the track. To avoid this, electric locking of derails has been introduced, so that after a signal has once been cleared, it is made impossible to change the derail until after the train has passed over the crossing. Until reliance can be placed upon enginemen to act strictly in accordance with the signal displayed, and in no case to overrun a stop signal, derails

will be a necessity and, with electric locking, can be relied upon. Essential features in connection with an interlocking plant are these, viz.: a system of tracks that with a minimum of switches will provide for the maximum traffic; a well constructed interlocking apparatus, the cost of maintenance to be the measure of its efficiency; a systematic arrangement of signals, so that their indications may be easily understood, the signals to be always on the right or over the track they govern; electrical control of high speed routes; ample means of communication for the information of the levermen.

Such is the interlocking system, one of the most interesting and valuable of the myriad of devices designed to facilitate railroad business and at the same time throw a needed safeguard around life and property.

SPLIT SWITCH: The split switch is another safety device intended to expedite business and at the same time mechanically protect trains where through men's neglect or omission they might otherwise be in danger. The split switch, as trainmen know, is a device by which an open switch in front of a train is closed by the action of the wheels of the locomotive. The device by which this is accomplished is so simple, and yet so effective, that we can only wonder railroads should have been operated fifty years before it was invented.

AUTOMATIC BRAKE: The automatic brake is another device, so arranged that if disabled to the extent that the train can no longer be controlled

through it, the brake is applied automatically and the train stopped; or, to state it differently, the brake stops the train when the brake is no longer to be depended upon to perform such action at the pleasure of the engineer. Thus the engineer is always assured of his ability to control the movements of his train. "Of all safety appliances, the air brake is the most important. It has greatly reduced the distance in which a train can be stopped compared with the distance in which it could be stopped by hand brakes. Thus, a train of fifty cars running at forty miles an hour cannot be stopped on a dry and level track in less than three thousand feet by hand brakes fully manned; but under the same conditions and on the same track the same train can be stopped in six hundred feet, or less, with the air brake. It also enables the train to be stopped instantly from any car without the loss of time necessary to communicate with the engineer. But what is of still greater importance in the automatic feature is that it makes the air brake quick acting by storing the air under each car, and it is the quick action of the brake that makes it possible to use it on any train."*

A description of the air brake and a manual of its workings will be found in another volume of this series. Also, an account of the brakeshoe. A description will also be found in another volume of the application of electricity to railroads.

AIR WHISTLE: The air whistle used on the rear of trains when backing up, to warn pedes-

* Arthur W. Soper.

trians and others, is esteemed a valuable safety device. It is an attachment of the air brake proper.*

BLOCK SYSTEM: The block system, another safety appliance, is a contrivance to prevent accidents and facilitate business. If the theory upon which it is based could be effectively carried out, two trains would never be upon the same section of track at the same time. Thus, if two trains were going south, the first must have passed from the section before the other could enter it. But the block system, so long as it merely signals danger, will not prevent accidents, because its working depends upon man's watchfulness and intelligence. Accidents, under such circumstances, will always be of more or less frequent occurrence. Thus, a section will be reported clear by the signalman when it is not, or the engineer will not observe the danger signal. The track may be occupied by train, or by an engine or a detached car. Signalmen are not more infallible than ordinary mortals. Indeed, where low priced men are employed, as is necessarily the case in many instances, they are exceedingly fallible. Opportunities for omissions and mistakes are particularly numerous and aggravating in connection with the movement of trains. The system, so-called, therefore, while

* It consists of a stop cock attached to the air brake hose. The stop cock has a whistle in it and when the valve is opened the air escapes through the whistle. Rapidly opening and closing the valve in the stop cock causes a short, sharp whistle. By moving the valve wide open a further and larger port is opened and thus the brakes on the whole train are applied from the rear of the train whenever it becomes necessary.

affording considerable security, is far from perfect. This is well known to railroad men.

AUTOMATIC SYSTEMS: The workings of the automatic systems are extremely interesting. Under one plan, when a train enters a section the signals protecting it indicate danger, and remain so until the train leaves the section, but should a car break loose from a moving train, the signals would not denote the fact. Apparently the section would be clear. The device to this extent, it is apparent, is deficient. Under another automatic system, the signals remain at danger if a car or truck is detached on a section; this because the electrical device governing the signals (at danger) is connected by the passing of a current through the wheels and axles of the vehicles on the section, so that one axle and set of wheels are as valuable for the purpose as a whole train, keeping the signals at danger until removed. It is claimed for both these systems that, in the event the apparatus is out of order, the effect is to place the signals at danger. The expense of the block system is too great to be warranted on railroads generally, but there is some portion of nearly every line where the needs of business justify its introduction.*

AUTOMATIC CAR COUPLER: The automatic car coupler is another safety device of great value. Its introduction was first suggested on that account, but it also cheapens and simplifies the

---

* The methods and mechanisms of signaling are more fully explained in another chapter.

service and thereby facilitates business. No device has been the subject of so many experiments or harassing perplexities as this. The old link and pin method of coupling cars in America was literally the occasion of hundreds of thousands of accidents to railway men. The Car of Juggernaut never claimed one-tenth as many victims. The automatic coupler sensibly changed this. It was at first thought to be impracticable except in the case of passenger trains, but it is equally adaptable to freight service. An order of the Interstate Commerce Commission had much to do in hastening its general introduction in the United States. The pattern is uniform throughout, so that cars may be interchanged between railroads at will. Uniformity in height of drawbar from the rail is one of its requirements.

It is probable that no safety appliance ever adopted approaches the automatic coupler in value so far as the employes of railroads are concerned. Referring to this subject, Arthur W. Soper, an authority on such matters, says: "The meeting of the master car builders at Minneapolis will ever be remembered as accomplishing one of the greatest works in the history of our railroads in deciding upon a uniform drawbar. For many years this subject has been before them. There never was a session at which it was not discussed, and it had finally reduced itself down to where there were six links and pins and six vertical hoops recommended by this association, none of which would couple with the other; and there the matter rested for years, until this decisive

step was taken that threw them all out and settled upon a single type requiring that every drawbar should couple with the other. In the history of our railroads no question has been solved more important than this. All these years there has hardly been a railroad shop that has not produced its many inventive geniuses who were devoting much time and money to their own particular safety couplers, and not alone was it confined to railroad employes. So much interest centered in the question that men of almost every occupation enlisted in it, until there were more than three thousand such appliances connected with car coupling in the patent office of this country, many of them in operation on the railroads, and hardly any of them that would couple with one another. Taking the many years past there is no doubt but that more time has been spent by officers of railroads in the examination of the different devices, and more thought given to the subject, than to any other, and it must be a relief to all their minds to know that the question is finally settled."

Miller Platform with automatic coupler.

VESTIBULED CAR: The vestibuled car is a comparatively modern invention. It is found to be a much safer vehicle than the old form, although

this was scarcely a consideration in its adoption. It was designed to facilitate passage from one car to another, and thereby add to the comfort of the traveler, but aside from this, it is found to be an economical device. It lessens the air resistance that the engine must overcome, steadies and strengthens the train when in motion, and in the event of collision, the resistance of all the cars is offered instead of a single car, as was at one time the case.

MILLER PLATFORM AND AUTOMATIC COUPLER: The "Miller" platform and automatic coupler (by which the ends of connecting passenger cars are brought closely together in the train on the line with the sills of the vehicles) are both extremely useful inventions. The latter prevents accidents to trainmen in coupling and uncoupling cars, while the former prevents passengers from falling between the vehicles while in motion. It also reduces the liability of vehicles being telescoped.

BLOCKS: The insertion of blocks of wood or other material in the space between the rails at frogs is another safety device of great value to railway men. It is designed to prevent the foot of the switchman being caught and held in the face of an advancing train. Many men have been killed or crippled in this way.

TOOLS: Among the minor safety implements connected with trains may be mentioned the axes, saws and other tools with which passenger cars are stocked, for use in case of derailment or other

accident. Provision for the extinguishing of fires has the same object in view.

STRENGTHENING OF CARS: While improvements in various directions have been taking place, progress has also been made in strengthening the passenger car. It is generally believed by railroad managers that the maximum security that can be attained in this direction is not too great. If the resources of a company are cramped, comfort must be sacrificed to safety in the construction of passenger cars. The car must be strong. It need not be elegant. Much thought is given the subject; humanity and business interests alike suggest it. The American freight car has also been greatly strengthened since the early days of railroads. Its carrying capacity has been doubled and quadrupled during the same period.

Whenever a safety appliance is practicable, and within the means of a company, its adoption will follow as a matter of course. Extraneous interference is not necessary, but governmental supervision can do no harm if not animated by demagogical influences. The pecuniary interests of owners compel them to be vigilant. Diminution of prestige, destruction of property, falling off of revenue, increased expenses, delay of traffic, loss of the confidence of the community afford all-sufficient incentives to them to adopt every reasonable measure to prevent accidents. A mishap, however unavoidable, is a reflection on the company. If occasioned by the ignorance or inefficiency of an employe or the lack of reasonable appliances, the case is aggravated. The owners

of railroads are thus compelled in self defense to adopt every reasonable precaution. They do this in their physical appliances, in the servants they employ and in their methods of government. There is no incentive so great as that of self-interest, and it is to this interest of owners that we may safely trust. To say, as we frequently hear it said, that every human precaution should be taken to prevent railway accidents is to magnify the subject. The revenues of the world would not meet this requirement. As soon might the people be taxed to provide precautionary measures that would render an accident on the streets or highways impossible. Danger attends every movement of our lives, and we must not expect to be free from it on railroads any more than elsewhere. All that can be asked is that precautions proportionate to the income of properties shall be taken. The safeguards that railways can provide depend, as in the case of private individuals, upon this. A company with an unproductive traffic cannot keep up its property to the maximum standard, nor provide many things desirable in themselves. This is true of every new country and of many old countries. Where means justify it, the care of railroad companies will be evinced in the heightened discernment of the force; in the strength and durability of the permanent way; in stable bridges and culverts; in well equipped cars and locomotives; in the character of the signal service and the precautions taken at stations and crossings.

A company operating an unproductive property cannot be held responsible for the omission of non-essential safeguards any more than private individuals can be expected to bear the burdens of the public in other walks of life. But in speaking of poor companies reference is not had to those whose resources are frittered away through public interference with well-known economic laws. Every accident that occurs where the inability of the carrier to prevent it grows out of the interference of the state, or its disregard of the laws of trade, should be paid for out of the public treasury.

A very large proportion of mankind does not possess the instinct of life; does not know how to preserve the body against common accidents or the diseases that nature imposes as a penalty for violated laws. Nothing except a personal attendant can prevent this class from getting in the way of moving trains or succumbing quickly to the casual dangers of life. In providing safeguards, therefore, they can, unfortunately, receive only cursory attention. They are fated! God himself has denied them the instinct of life, i. e., the disposition to guard it with reasonable care.

In the operations of railroads it is possible to adopt so many costly precautions against accidents as to prevent carriers rendering the accommodation necessary to enable the people to live comfortably. This is the case where the money used in constructing one needed road is sufficient to have constructed two needed roads along moderate lines of construction. There are

many things in the world of much greater consequence than isolated accidents to men. Such things, however much we may regret them, are not by any means the greatest calamity a community can suffer. For this reason the adoption of precautionary measures by railroads must be left in the main to those who are familiar with the properties and their duties to the public as Carriers. They only are able to weigh the good of the community as a whole in the balance against the vicissitudes of the few.

The power of the state to enforce safeguards is now everywhere recognized, but, after all is said, the possession of this power is valuable mainly for its quieting effect on the public mind. It should be used sparingly, There can be no doubt of the disposition of carriers to take up such matters as rapidly as circumstances permit. When so taken up, the work is done intelligently and without sacrificing greater interests.

Arbitrary interference of governments, while beneficent in particular things, in the end results in much greater harm than good. Such interference, moreover, when frequent and systematic, is to be deplored, because it lessens the responsibility of carriers. They shield themselves like children behind the government. Thus it becomes necessary for the latter to take the initiative, and in this way the owners and their experienced servants give place to the spasmodic and ill-conceived efforts of a less trained and less interested body of men.

The safety devices of railways, not less than other devices, require to be passed upon by practical operating officers who are in their way experts. Theories are thus held in due subjection to practical needs.

To attain the highest ends possible in connection with the train service, to secure the right thing at the right time, governments must restrict their operations mainly to suggestions and co-operative effort. Referring to this subject, the Royal Commission of Great Britain said most admirably: "We are not prepared to recommend any legislation authorizing such an interference with railways as would impair in any way the responsibility of the companies for injury or loss of life caused by accident on their lines. To impose on any public department the duty and to trust it with the necessary power to exercise a general control over the practical administration of railways would not, in our opinion, be either prudent or desirable. A government authority placed in such a position would be exposed to the danger of appearing indirectly to guarantee works, appliances and arrangements which might practically prove faulty or inefficient, or else of interfering with railway management to an extent that would soon alienate from it public sympathy and confidence and thus destroy its moral influence and with it capacity for usefulness." Governments should intermeddle only in extreme cases, and their acts should be discriminatory, i. e., should recognize inequalities of properties, traffic and location. In the

protection of seamen it is not provided that vessels shall all be alike or all be supplied with like utensils. Conditions are adjusted to conform to the ability and character of the carrier. The same rule should be observed with railroads. It should be remembered, always, that carriage of persons and property is the primary feature. When a company is able to do this with reasonable facility and profit it may be asked to go further and apply a portion of its surplus for accessories or luxuries of the service. Not that any company should be permitted to use unsafe vehicles or structures of any kind, but further than this, and the due exercise of the common precautions of the service, it is not desirable to go if the income of a company does not justify it.*

The precautions adopted by the railways of Great Britain to prevent accidents are the most perfect in the world. The enormous sums that they have cost are, however, a burden in many ways. Thus, the block system greatly increases the expense of operating and adds to the interest burden on first cost, and when we remember the number of accidents that have attended the use of the system, the expediency of its general introduction, regardless of the income of properties, may very well be questioned. It lessens the dan-

---

* It has long been a very general practice, on some of the best managed railroads of America, to use a portion or all of their surplus income, each year, in improving their property and adding to its facilities. These expenditures seek the most urgent channels, but in any event contribute much to the efficiency and safety of the line. It is thus steam has been introduced into cars for heating purposes; gas in place of oil lamps; the air brake, and so on.

ger, but does not obviate it. On the other hand, it entails lasting burdens. It is a tax on the internal commerce of the country. The accommodation the English roads are able to render the community would be much greater except for this load. The block system, like other safety devices, should be adopted wherever business needs justify, and not otherwise. Practical, not utopian, theories should govern. Railway appliances not warranted are simply "fads." It would be much better for the community if many European roads upon which expensive appliances have been provided to prevent accidents were operated under the simple and inexpensive methods of America.

When a company is too poor to afford the luxury of safety appliances, it enforces, in their absence, such simple and inexpensive devices as practical sense and experience dictate. Thus, if a track is not properly ballasted or drained, or a bridge or culvert is weak, trains are run slowly to insure safety. Primitive methods of operation are resorted to. The nature of the business does not warrant anything else. It is only on lines where adequate precautions are taken that fast trains are possible.

In conclusion, the following is a brief and imperfect summary of railway construction upon which the safety of life and property in a measure rests: Drainage must be such as to prevent the track being undermined. The ballast must be sufficient, and of the right kind, to secure needed elasticity. Ties must be sound and stable. The

rails must be sufficient to withstand the weight of trains. The track fastenings must be such as to prevent accidents from this source. Bridges and culverts must be sound and strong and must be carefully looked after, as must all the appliances of the track. Waterways must be sufficient to carry off the maximum quantity of water that may fill the streams. Overhead bridges at public crossings, or, in their absence, gates and gatemen, supplemented by stringent police regulations rigidly enforced, add to the security. Regulations preventing trespassing upon the right of way will still further increase the safety of a line. The protection of grade railroad crossings by interlocking switches or other devices, whereby two trains will be prevented access to a crossing at the same time, are necessary to insure reasonable safety where trains are permitted to cross without stopping. The use of the block system, whereby it is attempted to prevent two trains being upon a given section of track at the same time, is valuable as a means of preventing accidents. Where there are two or more tracks, overhead bridges at stations add to the security, and the placing of such fences as may be necessary to render it impossible for the public to gain access to the tracks, except under due regulations, will tend still further to prevent accidents. Uniformity of signals and efficiency in handling them are essential things. Short arms or discs are valuable at stations and junctions for facilitating switching operations and as precautionary measures. They, in a measure, do away with

hand signaling, which is attended with more or less danger. Among other devices and methods of business intended to facilitate affairs and prevent accidents, I may mention care in constructing, inspecting and maintaining equipment; the fitting up of locomotives and cars with the automatic air brake; the use of steam for heating cars; the use of electricity or gas for lighting cars; the avoidance of running engines backward; the running of switch engines at moderate rates of speed; the providing of means of signaling the engineer from the car; the raising of passenger platforms to a uniform height and fitting cars with high continuous footboards; the arrangement whereby the sills as well as platforms of cars coincide, so that in the event of collision or similar accident the full strength of the vehicles is opposed to their tendency to telescope; the removal of the driving axles of locomotives under carefully calculated provisions; the fastening of tires more securely; better car wheels and brake shoes; the providing of check rails on curves with a radius of ten chains or less; the avoidance of grade railroad crossings at stations, or, when this is impossible, the introduction of interlocking switches; the fitting of cars with automatic couplers; the avoidance of overwork by employes; the annulment of rules not intended to be carried out; the running of trains according to the provisions of the time table; the providing of signalmen in case of fogs; the use of "catch points" on inclines of track so as to prevent vehicles running away, etc. All these things and many more I might

mention are, in the main, highly necessary for railways that can afford them, but as a rule totally out of place in other places. The reader will readily note, in looking over the list, what is fundamental and what is not. To force a company to provide non-essential things when it has not the means to do so is robbery; confiscation of property. Instead of asking such a company to sink the private fortunes of its owners in a vain effort to secure ideal safety appliances, it should be encouraged to make the móst of what it has; to carry out that which is practicable, among other things to see that its train force is well instructed and disciplined and that due care is exercised in running trains if the track or bridges are at all insecure. I need not say that railway companies will do this without suggestion, but the public seems to feel the necessity of government officials exercising some authority in such matters, and it may be exercised in this direction without injury to a country or the railroad properties which form so great a part of its wealth. England, as I have pointed out, has sunk vast sums in building ideal railroads to meet ideal wants, and thus it is burdened and ever will be with outlays which its people are more and more coming to believe might have been avoided had better judgment been exercised in the first place.

CHAPTER X.

HEATING CARS, STEAM SYSTEMS: GOLD'S, VAPOR, AND ECONOMY. HOT WATER SYSTEMS: GOLD'S COMMINGLER, BAKER HEATER, QUESTIONS AND ANSWERS.

The problem of heating trains has always been a difficult one. While apparently simple, it is really exceedingly complicated. The subject has exercised the ingenuity and thought of inventors and railway managers from the start. It is not a question simply of warming the car, danger in case of accident also intervenes.

The American Railway Association thus describes the essential requisites of train heating:

First—That provision be made for heating cars whether standing or running.

Second—That some simple efficient way for the regulation of the temperature be provided to the end that the cars may be ventilated, whether the train is running or standing.

Third—That a system of ventilation be used in connection with the heating.

Fourth—That it require no materials peculiarly difficult to obtain.

Fifth—That it be of reasonable cost.

Sixth—That the details be such that cars shall be readily interchangeable.

Seventh—That it be harmless in a wreck.

Eighth—That it expose no one to the risk of burning when in ordinary use.

Ninth—That it be so arranged as not to be liable to injury from freezing.

In the days of stage coaches, no attempt was made to warm the vehicles, except, perhaps, by heated bricks, or bottles of hot water, or sheet iron receptacles filled with live coals. Similarly, railway cars in other countries were at first left unprovided with stoves, and passengers made the best provision they could to protect themselves. But in America at an early day large stoves were introduced. These were placed in the middle or at the ends of the cars. Sheet iron stoves in which wood was burned were first used; later, heavy cast iron stoves took their places in which both coal and wood were burned. Afterward, stoves especially intended to burn coal were provided and these were very generally used.

No practicable substitute for the stove presented itself to carriers for many years. With the introduction of the system of heating by steam from the engine the difficulties of the situation were sensibly lessened. Indeed, so great has been the progress in this direction that it seems as if perfection had been reached. But here, as in every other department of affairs, we shall quickly discover how crude are our designs; how much they may be bettered and cheapened. We know this to be so because with each stage of man's progress his inventive genius expands. This is partly because his needs are greater. His intelligence is sharpened by the demands made upon it. With

each step he also grows more exacting. His complaints are louder, his effeminacy more pronounced. It is not enough that he must be warmed; he must be coddled.

In the question of heating cars it is manifest that climate has much to do with the method employed. Thus, in Great Britain and on the continent of Europe, receptacles containing live coals or heated water are considered quite sufficient. A cylinder containing hot water is a means generally employed; it is placed on the floor of the compartment and upon this passengers rest their feet. In many Southern countries there is no provision whatever for heating cars or affording warmth of any kind. In the Northern States of America careful provision is required. Generally speaking, it is not an exaggeration to say that in no other country have railway managers given the subject the careful attention they have in America. The progressive steps of the latter evince this and the perfected methods employed testify to the generous provision of the carrier and the skill of those who devoted their minds to the subject. Every device for heating a car contemplated furnishing the heat from the vehicle itself. Ingenious methods grew up by which cars were heated by hot water and air, but always from within, and always with the dangers that attend such systems. In the best of these stoves the fire was inclosed in a jointless cylinder of cast iron; this was incased in another cylinder of wrought iron, and the latter, in turn, was covered by a cylinder of sheet iron, a space of four inches

being allowed between the cylinders for the circulation of the air. A radiating pipe was coiled within the fire. This pipe ran up to and from thence down from a drum on top of the car, and thus extended the entire length of both sides of the car, about six inches from the floor. The iron drum was an air and water reservoir; the lower half contained five or six gallons of water, the upper half afforded a chamber for the air escaping from the hot water. The air confined in this chamber acted as a cushion, or elastic head, which was compressed as the water was expanded by the heat. The radiating pipe was also filled with water, and, when necessary, the supply was replenished from the drum. A gauge and supply cock fastened to the side of the drum at high water line indicated the height of the water, this also acted as a funnel through which water might be added when necessary. It may be remarked, however, that the waste of water caused by use was very slight. A safety vent attached to the top of the drum afforded an opening through which the confined air and part of the water in the drum might escape in case the pressure exceeded a certain limit. The condition of the fire was ascertained by an indicator attached to one of the perpendicular pipes in the car. The danger arising from freezing was prevented by the use of salt in the water. For this purpose a fine, dry salt was used, and as much put into the water as it would hold, but care was required to be exercised to see that no undissolved salt was put in. If desired, the heat of the fire could be replaced by

the heat of steam drawn from the locomotive. The steam was conducted from the locomotive by means of a train pipe to the car, being carried and introduced into jackets which surrounded the radiating pipes in three different places. The result was a more uniform heat than that produced by the heater described. An increase of the average temperature of the pipes throughout the car was also thus obtained, and in a much shorter time.

Steam generated in and applied from the locomotive is recognized as the best form of heating. It is at once easily regulated, occasions an agreeable temperature, and frees the passenger from the danger of fire. In the earlier experiments steam from the locomotive was admitted directly to the pipes within the car by means of a train pipe. This is known as the direct system of steam heating and has decided merits, especially in the case of cars used in suburban service, which are detached part of the day and required to be heated from the engine when taken up. The radiators consist of two-inch pipes secured to the sides of the car. Steam is conducted to each side independently from a cross in the train pipe, which conveys steam from the engine. In case the two pipes do not give sufficient radiation, larger radiators may also be placed in each end of the car. A regulating cock allows the steam to enter into both radiating pipes when desired, or it may be shut off from the upper pipe. When no heat is required, the steam may be shut off entirely. The condensed water in the radiating pipes is controlled and discharged through a drip valve placed under

one of the seats of the car. Great difficulty has been experienced in controlling the heat in methods of direct steam heating, but with the introduction of the regulator described this obstacle was measurably overcome. At stations where suburban cars are detached for a portion of the time, it is becoming more and more the practice to establish local heating plants for the purpose of warming the cars before attaching them to the train.

Another method of heating is known as the hot water circulating system, by which the cars receive their heat from steam carried through a train pipe. Dry steam is taken from the locomotive boiler and the heat conveyed to the water circulation within the car by induction or through metallic surfaces. In other cases steam is injected directly into the body of water to be circulated. The circulation is aided by the action of the steam causing a motion of the water. Rapid circulation causes the transmission of heat more evenly through the pipes.

The vacuum system of heating has been used with very satisfactory success. Two pipes extend the entire length of the train—one for supply, the other for exhaust. They are coupled by hose between the cars. A vacuum pump on the tank of the engine is attached to the exhaust pipe. The exhaust steam from the engine is admitted to the supply pipe, and in ordinary weather is found sufficient to heat the train. When insufficient, live steam from the engine may be admitted to the supply pipe.

The so-called low pressure system of heating has been found to work very successfully under certain circumstances. The heater consists of two cylinders, one inside the other. The inner one is made of brass, and is filled with small copper tubes. The outer is constructed of wrought iron and is connected to the heating pipes of the car by pipe. The inner cylinder is connected with the pipe which carries live steam directly from the locomotive in manner similar to that in the direct heating systems. The outer cylinder is partly filled with water; the heat from the steam in the inner cylinder converts a portion of this into steam, which circulates through the pipes that heat the car. The steam which condenses by coming in contact with the cold pipes flows back to the cylinder, where it is again converted into steam and again circulated through the pipes. Three gallons of water are said to be enough to heat a car under this method. It is claimed a car may be heated in five minutes after the steam valve connecting with the locomotive has been opened. No water ever remains in the pipes, the incline being so arranged that it is immediately carried back into the cylinder.

A method of heating cars with hot water from the engine has its advocates. A heating drum made of wrought iron is placed beneath each car, near the center. Within this drum are four corrugated copper pipes attached to a cast-iron head. These are arranged in two separate steam circuits. A train pipe extends the entire length of the train, and connections are made between it and the cor-

rugated tubes within the drum by means of a cast-iron head, a port being provided for that purpose. A second lower port is also provided for carrying off the water produced by condensation. The drum is connected to the heater pipes of the car, the latter being so placed as to make four complete circuits on each side, extending from the center to the end of the car, where they connect with the return pipe or inflow to the heating drum. A two-inch pipe leads from the outflow end of the drum to each side of the car, entering a distributing casting which has leading into it the two upper pipes. The water flows out through these two pipes to both ends of the car and returns to the center through two lower pipes. It is returned to the inflow end of the heating drum by a pipe. In this way the water in each of the circuits is brought into contact with the steam heated corrugated surface while it flows the entire length of the heating drum. When a water heater is used in this connection, the hot water is carried from the heater into the drum beneath the car, from which it is distributed to the car in a manner similar to that employed when steam heat is used. Users of this system claim that all parts of the car receive heat from the circuit in the same degree at the same time, as a difference of temperature between the outgoing and incoming pipes of but a few degrees will cause the circulated water to return to the heating drum and again rapidly circulate through the car.

A hot air system of heating cars consists of an air reservoir and a coil of pipe placed inside the

front (extension) end of the locomotive. The reservoir extends back to the exhaust pipe. The coil of pipe is placed directly in front of the boiler flues, where it receives the direct force of the heat which goes through them. The air is forced by an air compressor fastened to the side of the locomotive boiler. This draws air from the atmosphere and forces it into the reservoir, from whence it passes through the heating coil and is carried to the cars by means of pipes provided for that purpose. Coils placed under the seats, passing down one side of the train and back the other, carry the hot air through the cars. After making the circuit the air is discharged to the atmosphere through a valve on the tender. Connections between the cars are made by hose and couplings. Safety and cleanliness are especial advantages attributed to this system of heating.

How far it will be possible to use electricity for heating purposes remains to be seen. It is however, found practicable on lines operated by electrical power. Although expensive, its advantages are so manifest as compared with stoves that the added cost is fully compensated for in this class of service. The current is turned on and off in the same manner as in the case of electric lamps.

The following details of modern systems of train heating will be interesting and instructive:

GOLD'S IMPROVED HEATING APPARATUS FOR LOCOMOTIVES. (STEAM.) Equipping an engine and tender to supply steam for passenger trains is a simple matter. All pipes must pitch to avoid

water pockets. Any exposed pipes should be well covered.

Steam is usually taken at the fountain, as shown by Fig. 1. For this purpose a locomotive starting valve is used. This valve has a Tobin bronze spindle, a hard metal seat, and a malleable iron handle. Its inlet is screwed directly into a two inch port in the fountain. From its outlet a one and one-half inch extra heavy pipe runs to the inlet of the regulator. This pressure regulator is provided with brass unions at both sides, the inlet being one and one-half inches and the outlet two inches. From the pressure regulator outlet a two inch nipple runs to a tee. This tee is tapped for one-quarter inch pipe connection to steam gauge, the latter indicating pressure delivered to train. The two inch line is brought down to a convenient place at the side of boiler and continues horizontally to a point where the two inch by one and one-half inch sixty-five degree ell is located. A steam hose coupler is attached to this elbow. The adjacent coupler is connected to the pipe under the tender by another such ell. A two inch line is run to the back of the tender pitching to the rear. A two inch by one and one-half inch sixty-five degree ell is then fitted and the steam coupler applied.

A regulator (Fig. 2) reduces from boiler pressure to whatever amount may be needed for steam heat and maintains any desired pressure in the train pipe regardless of varying conditions on either side of valve.

The handle "I" is used for setting the regulator. The valve is opened by turning the handle

Gold's Improved Heating Apparatus for Locomotives.

Fig. 1.

932	Starting Valve.	900	Gold Steam Coupler.	935	2" Ell.
928	Gold Improved [redacted] Regulator.	933	1½" Ell.	936	2" x 1½" 45° Ell.
931	Steam Gauge.	934	2" x ¾" x 6" Tee.	938	2" R. and L. Coupling.

PARTS OF GOLD'S IMPROVED BALANCE VALVE PRESSURE REGULATOR.

A.—1½ inch Inlet Union Nipple.
B.—2 inch Outlet Union Nipple.
for Dome and Body.
Hard Seats.

H.—Bottom Plug.
I.—Handle.
J.—Top Nut.

M.—Dome of Regulator.
N.—Lock Nut.

R.—Set Screw.
T.—1½ inch Inlet Union Nut.
U.—2 inch Outlet Union Nut.

from right to left. When adjusted for the proper supply it may be locked by the nut "N." The set screw "R" limits the maximum or minimum pressure. The illustration shows how the movement of the spring "L" is controlled by this set screw. The ends of this spring are flattened, and as no lateral motion is permitted, it affords an even bearing. Being above the diaphragm and enclosed by the dome, it will always be as positive as when first applied. The lower spring "F,"

PARTS OF GOLD'S IMPROVED TEMPERATURE REGULATOR.

A.—Body of Regulator.
B.—Dome of Regulator
C.—Top Spring.
D.—Adjusting Screw.
E.—Top Nut.
F.—Bolts and Nuts for Dome and Body.
G.—Tee Handle.
H.—Indicator Spring.
I.—Washer.
J.—Top Flange.
K.—Bottom Flange.
L.—Auxiliary Valve Spindle.
M.—Main Valve Spindle.
N.—Bottom Spring.
P.—Bottom Plug.
R.—1 inch Inlet.
S.—1 inch Outlet.

which lifts and guides the spindle "DD," is made of special composition and will not deteriorate. The recess shown at "SS" provides a water seal. This prevents chattering. The valve is noiseless in operation.

The degree of heat supplied is controlled by a Tem[illegible]. a [illegible]ctional view of which

Steam from the train line enters the regulator at "R." As handle "G" is turned from left to right, spring "C" compresses, and its force, acting through the diaphragm, opens valves "L" and "M." Steam then passes to the radiator. After the required pressure has been delivered, any increase will overcome the tension of spring "C," and as valves "L" and "M" are perfectly balanced, the lower spring "N" will immediately lift them to their seats, thus stopping the admission of steam.

As pressure decreases in radiator it also relaxes under diaphragm, and the tension on spring "C" again forces the valves "L" and "M" downward and holds them open until enough steam is admitted to compensate for the amount lost by radiation. When the required pressure is again delivered the valves close automatically.

If additional heat is needed, pressure must be increased. To do this, handle "G" should be turned further to the right. If lower temperature be desired, handle should be moved in the reverse direction.

The figures on a dial indicate pressure in radiator. A number of grooves are provided in which the spring "H" may rest. These provide a friction lock. They are so arranged that the regulator will deliver 5-10-20-35 or 50 pounds. When the handle "G" is turned clear back to the stop, the valve will then supply only 2 pounds pressure.

Steam condenses in chamber "OO," and this forms a water seal which prevents chattering.

Gold's Improved Direct System for Heating Passenger Cars.

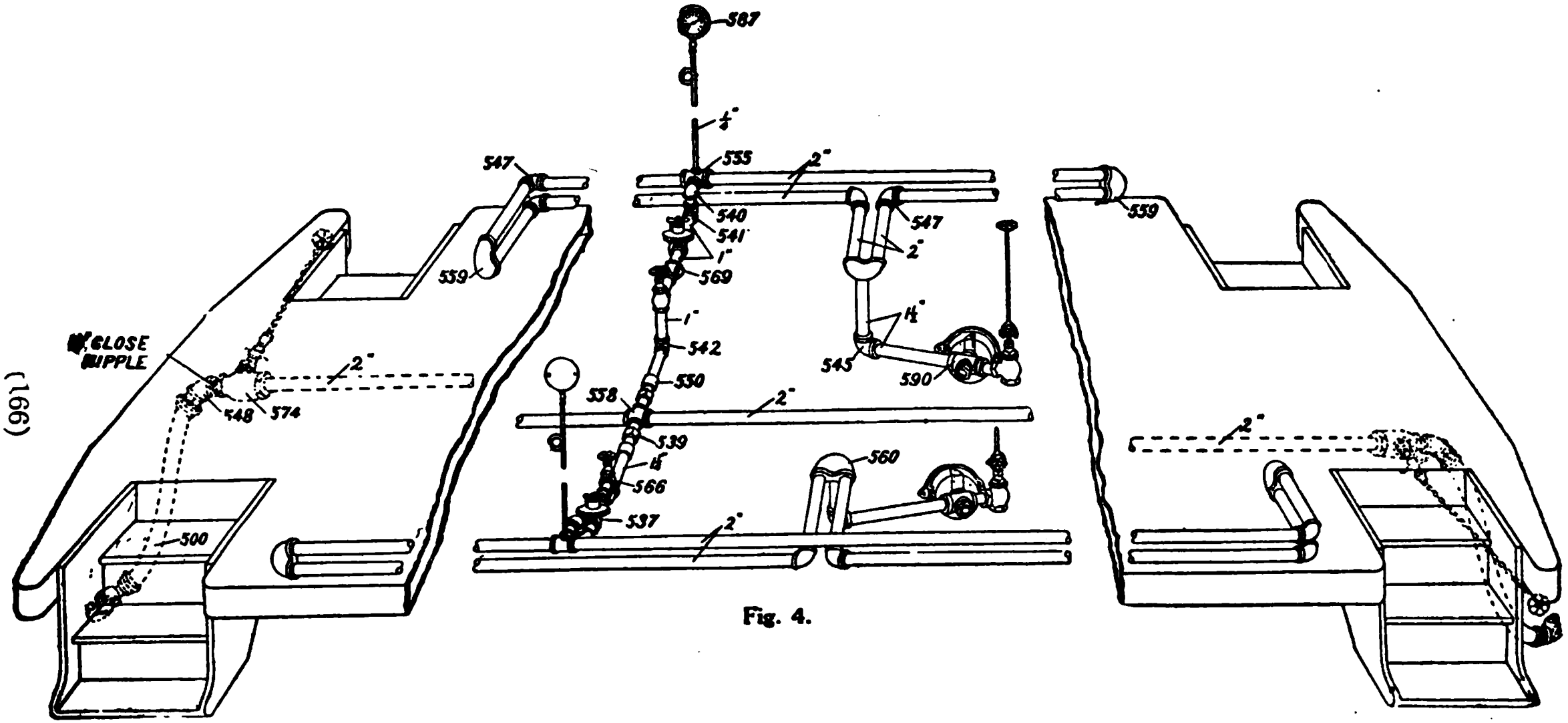

Fig. 4.

500 Gold Steam Coupler.
574 Gold End Train Pipe Valves.
537 Gold Temperature Regulator.
569 Straine Tee.
567 Car Guage.
590 Gold Improved Tee Trap.
566 1" Supply Valve.

555 2" x 2" x 1" Tee, ¼" Side Outlet.
559 2" R and L Return Bend.
547 2" R and L Ell.
560 2" Return Bend, 1½" Side Outlet.
545 1½" Ell.

539 Strainer Nipple.
558 2" x 2" x 1¼" x 1¼" Cross.
548 1½" 65° Ells.
550 1¼" R and L Coupling.
542 1¼" x 1" Ell.
540 1" Ell.
541 1" R and L Ell.

Fig. 5.

The smaller valve "L" is the medium which affords a proper balance. When both valves are seated the spindle of "L" extends one thirty-second of an inch beyond that of "M." As the plate "K" travels downward, the valve "L" is opened first and passes steam to the low pressure side through the slotted openings in the spindle of valve "M."

GOLD'S IMPROVED DIRECT SYSTEM. (STEAM).—In this system a two inch train line is located under the car. At the middle of this pipe is placed a cross 558, Fig. 4, and from this fitting branches lead to either side. The train line should pitch from the cross to both end valves. Each side of the car is controlled by a separate admission valve and temperature regulator.

As illustrated the heating surface consists of two courses of two-inch pipe running along the truss-planks. Expansion loops are provided as shown. The two-inch return bends, 559, employed in making these loops are tapped to spread. The upper pipe must be in line with the top of the truss-plank, and therefore the lower pipe only will pitch downward as a result of this special tapping. The lower radiator pipes run to loops which terminate in the special bends 560. From the side outlet of these bends a one and one-half inch drip pipe is carried through the floor and directly to the automatic tee traps. All pipes leading to traps must pitch downward. This is very essential, as the water of condensation must always pass readily to the outlet. Particular care should be taken to avoid water pockets.

GOLD'S IMPROVED STORAGE SYSTEM FOR HEATING COMPARTMENT CARS. (STEAM).—This system, it is claimed, combines a rapid and effective heating of the car with great economy.

The construction of the heater itself is based upon scientific principles and in accordance with well-known laws of natural philosophy. The storage feature is provided by Terra-Cotta Sections. The accompanying illustration, Fig. 5, shows the terra-cotta bricks in a cylinder. The latter is usually a five-inch boiler tube. The bricks, which fit snugly inside, are twelve inches long. As many bricks are placed in the tube as are needed to fill the heater which is to be used.

When steam is admitted to the heater it passes through the corrugations of the bricks and circulates around them, with the result that the cylinder is immediately heated while the bricks absorb the hot condensed steam very readily. In this way the rapid warming of the car and the storage of heat within the cylinder are effected simultaneously.

The surplus condensation passes out through the opposite end of the heater, thence down a drip pipe, and is finally discharged at a trap. The train pipe runs under the car, and usually pitches from the middle toward both ends.

Steam is taken from the train line and after passing through a strainer nipple, proceeds through a one-inch pipe to an angle valve. From there it goes through a strainer tee, and thence directly to the temperature regulator. This temperature regulator admits whatever amount of steam may be necessary to the separate supply

out by gravity as fast as it reaches the lowest point of the heating pipes, and as there is thus never any water backed up in the pipes the possibility of freezing is eliminated. The pipes are automatically filled with steam at atmospheric pressure—equivalent to 212 degrees or the temperature of boiling water, thus giving an agreeable heat.

In other heating systems the heat of the escaping condensation has been used to operate automatically some form of a trap or discharge valve placed in the outlet or lowest part of the heating pipes. This has resulted in carrying practically the same pressure in the radiating pipes inside the car that was carried on the train pipe underneath the car. As shown by the accompanying illustration, Fig. 6, in the vapor system, train pipe pressure only reaches the inlet of the radiating system, whereas with the pressure system, train pipe pressure is passed through the entire radiating system to the outlet. With the high train pipe pressure required to heat the rear end of a heavy train, this method of carrying train pipe pressure in the heating pipes inside the car has resulted in overheating the cars. The placing of a trap or valve at the outlet of the apparatus has, of course, necessitated the backing up of more or less water in the pipes, thus furnishing an opportunity for freezing of the apparatus.

GOLD'S COMBINATION PRESSURE AND VAPOR SYSTEM. With Gold's combination pressure and vapor system cars may be heated at different temperatures without increasing the manipulation or

320—Automatic Vapor Regulating Valve, Complete.
320—A Body.
320—B Diaphragm Case.
320—C Diaphragm Case Cover.
320—D Diaphragm.
320—E Valve.
320—F Valve Stem.
320—G Spring.
320—H Strainer.
320—I Bottom Plug.
320—J Bonnet.
320—K Packing Nut.
320—L Diaphragm Shield.
320—M Diaphragm Plate.

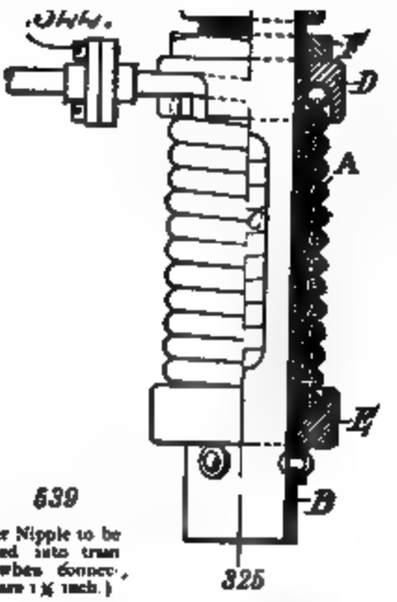

639
(Strainer Nipple to be screwed into train line when connections are 1¼ inch.)

321—¼ Copper Pipe with Flanges (in ordering, give length.)
322—Steel Flange Screws.
325—Vapor Reservoir, Complete.
325—A Copper Coil.
325—B Slotted Pipe.
325—D Top Cap.
325—E Bottom Cap.
325—F Lock Nut.

826
(Strainer Nipple to be screwed into train line when connections are 1 inch.)

326—G 2 x 1 Brass Connector (to be used only when connecting to horizontal trap.)

Fig. 8

at the end of a run, the hand-wheel F is turned, opening the blow-off valve 598. To convert this direct steam system into a combined pressure and vapor system, it is merely necessary to insert the automatic vapor regulating valve 320 in the branch pipe, between the main C and the supply valve 566, and attach to the blow-off 598, immediately below its extremity, the vapor reservoir 325.

The operation of the automatic vapor regulating valve and the vapor reservoir will be understood by referring to Fig. 8.

The vapor reservoir (see Fig. 8) is below the blow-off or drip valve and forms an extension thereto. It consists of a spiral coil of copper piping, 325-A, surrounding the pipe, 325-B, which forms the extension to the blow-off valve. This pipe, 325-B, has several slots, C, cut through to allow the hot water escaping from the system to trickle over the spiral copper pipe, 325-A. This spiral pipe is filled with a liquid that boils at a low temperature and an extension of the pipe is connected to a diaphragm, 320-D, in the frame of the automatic vapor regulating valve. One or more joints are used to connect the coil, 325-A, and the diaphragm, 320-D, these joints being of a type for securing tight connections under high pressures. The extension of the diaphragm, 320-D, closes the steam valve, 320-E, by means of the stem, 320-F, as soon as the liquid in the coil reaches a temperature at which it boils, under which conditions the vapor generated has sufficient force to close the valves, 320-E, against the

220—Automatic Vapor Regulating Valve, Complete.
220—A Body.
220—B Diaphragm Case.
220—C Diaphragm Case Cover.
220—D Diaphragm.
220—E Valve.
220—F Valve Stem.
220—G Spring.
220—H Strainer.
220—I Bottom Plug.
220—J Bonnet.
220—K Packing Nut.
220—L Diaphragm Shield.
220—M Diaphragm Plate.

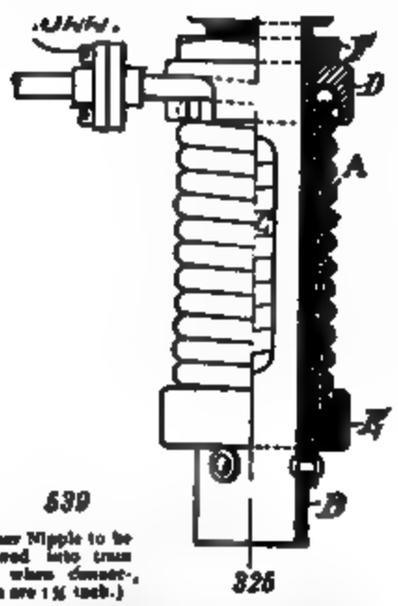

539

(Strainer Nipple to be screwed into train line when connections are 1½ inch.)

326

221—¼ Copper Pipe with Flanges (in ordering, give length.)
222—Steel Flange Screws.
225—Vapor Reservoir, Complete.
225—A Copper Coil.
225—B Slotted Pipe.
225—D Top Cap.
225—E Bottom Cap.
225—F Lock Nut.

826

(Strainer Nipple to be screwed into train line when connections are 1 inch.)

225—G 2 x 1 Brass Connector (to be used only when connecting to horizontal trap.)

Fig. 8

spring, 320-G. When the liquid in the coils cools, which follows the cutting off of the steam supplied to the radiating coils, the vapor condenses and the spring, 320-G, forces the valve open, allowing a fresh supply of steam to enter the heating pipes and supply additional heat to the car.

I

By referring again to Fig. 7, it will be seen that under these conditions of operation, the heating system is run with a drip open to the atmosphere continually and therefore there can be no pressure in any of the pipes in the car or beyond the automatic vapor regulating valve, 320, which can exceed atmospheric pressure, and also that the steam supply will be regulated by the automatic valve admitting such quantity as may be necessary to keep the pipes sufficiently warm with steam of low pressure and corresponding temperature, and

that this valve will be closed when the pipes and the drip become sufficiently heated to generate pressure in the spiral pipe. Under these conditions the temperature of steam in the heating pipes will be about 212 degrees Fahrenheit, and under conditions of moderate outside temperature or a moderate inside temperature desired at night (as in sleeping cars), a comfortable temperature may be maintained without continually opening and closing the supply valve, 566.

Supposing colder weather prevailed, necessitating an increase in the heating capacity of the system, it will be seen that by closing the blow-off valve, 598, the water of condensation must pass through the trap, 590. This device is the same trap used with the Gold System for years, known as the horizontal trap or automatic tee trap. It is opened and closed by an expansion chamber, the movement of which is governed by the temperature of the water which passes over and around the same in escaping from the heating pipes, and as soon as the temperature is sufficient the trap closes, thus retaining in the heating pipes such pressure as may be brought to them through the supply valve, 566. If, therefore, the pressure in the train line is in the neighborhood of 30 pounds per square inch, the temperature of steam in the pipes will be about 275 degrees Fahrenheit, or about 63 degrees higher temperature than with the vapor system. With this arrangement all the drip or condensed steam is compelled to pass through the trap 590, as the valve is closed and the vapor reservoir will, therefore, become cool

and the automatic vapor regulating valve 320, will remain fully open.

Thus in order to change from the pressure or high temperature system to the vapor or low temperature system it is only necessary to open the blow-off valve 598, by means of the hand-wheel, F, no further attention being required until more heat is desired. Hence at night in a sleeping car, when interior temperature is desired, the

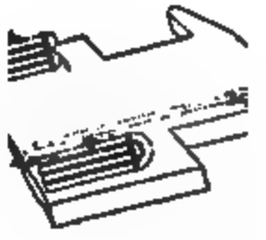

F

porter need simply o ff valve 598, ing the steam pipes to cool to about 212 d Fahrenheit in order to maintain a modera perature throughout the night.

There are other incidental advantages nection with this combination system o erable interest relative to car standing ir yards in cool weather. Without the

vapor regulating valve, 320, and the vapor reservoir, 325, or as the direct systems are generally installed, when it is desired to heat the cars at terminals before placing them in service, it is customary to connect with the steam pipe leading from the power plant or stationary boiler and open the blow-off valve in order to quickly warm the cars. Ordinarily we soon have a strong current of steam emitted from these blow-off valves which blow out from under the car, very rapidly

destroying the varnish on the exterior surface, besides wasting steam and fuel without producing beneficial results. With the automatic vapor regulating valve and the vapor reservoir, however, as soon as the pipes become warm and steam issues from the drip, the valve is automatically closed and only sufficient drip will be emitted to keep

a circulation in the pipes. Sometimes a locomotive is using steam to the limit of its boiler capacity, and as with this system the train line pressure can be materially decreased there is a consequent saving of steam. The same is true when changing engines, as the automatic vapor regulating valve practically takes care that sufficient steam is used to reheat the cars, but none is wasted.

Under conditions where cars operate continually in a warm climate, and only a moderate degree of heating is required, the vapor system alone may be used, as illustrated by Fig. 9. In this arrangement the interior pipes are the same as in Fig. 7, but there is no trap or blow-off valve used, so that the supply valve is the only piece of apparatus inside the car to be operated by trainmen. It is simply a question of opening the supply valve, 366, when desiring heat and closing it when no warmth is needed from the heating pipes. The automatic vapor regulating valve, 320, and the vapor reservoir, 325, are used in the same manner as in Fig. 7, but, of course, under these conditions it is only possible to obtain an amount of heat equal to steam at atmospheric pressure. In Fig. 9 the same letters designate the corresponding parts as in Fig. 7.

There are conditions under which the use of a heater and hot water system are advisable, so that should the car be detached from the engine for any length of time a coal fire may be started in the heater, thus maintaining the temperature of the interior. The combination vapor and pres-

sure system is also applicable to the hot water system, the arrangement being illustrated by Fig. 10. In this case steam is admitted from the train line C into the interior pipes of the double coils in the heater or stove by means of the valve F, the drip from the two coils being united and discharged from the car through the vertical trap, 606. Under the ordinary means of working with the valve B closed there would be the same pressure in the coil of the heater as in the train pipe, but by opening the valve B communication with the atmosphere is established and the pressure immediately falls to that of the atmosphere, the temperature of the steam being reduced accordingly. The automatic vapor regulating valve then comes into operation and maintains a low temperature steam supply in the interior coil of the heater, thus reducing the temperature of the circulating water in the pipes A. The regular connections to expansion drum, etc., are shown as ordinarily applied to hot-water heating systems.

In Fig. 7 the traps shown are of the horizontal type, but in Fig. 11 there has been indicated the vertical type of trap, which has the copper spiral wound around the outside of the vertical pipe and produces an action precisely identical with that described in connection with the horizontal trap.

VAPOR SYSTEM AND COMBINATION VAPOR AND DIRECT STEAM SYSTEM: As will be noted from the illustrations (Figs. 12 to 15) trap No. 172 can be arranged to provide the vapor system or direct steam system, or a combination of the two, as

furnished by the Consolidated Car Heating Company. This vapor system differs from the well-known direct steam-heating system in that there is no pressure at any time in the radiating pipes. Fig. 12 illustrates the combination trap set to provide vapor heat. The trap is located underneath the car and a branch pipe from the train-line admits steam to a chamber in the main casting, which chamber partly surrounds the trap. This chamber is a special feature, which gives the trap the protection of live steam at all times, and the heat thus provided prevents freezing of the condensation which passes through the trap. Valve "A" is the inlet valve which, when open, permits steam to pass through valve "C" and into the piping in the car. The condensation enters at the drip port and falls upon the diaphragm "X" in passing out. The hot water causes it to expand, raising the rod which rests upon it, thus temporarily closing the valve "C." While this valve remains closed no further steam is admitted to the system. As the diaphragm is exposed to the outside air it cools rapidly and contracts again, unseating valve "C," permitting steam to again flow into the piping. It continues thus to flow until the diaphragm again shuts valve "C." This operation is continued automatically and indefinitely.

If for any reason it is found desirable to raise the temperature of the car piping over that provided by the vapor system, valve "B" is opened as shown in Fig. 13, permitting the steam to pass into the riser pipe at the train-line pressure. When

COMBINATION TRAP NO 172 R.
ADAPTED TO OPERATE AS VAPOR.

COMBINATION TRAP NO 173 R.
ADAPTED TO OPERATE AS PRESSURE.

TRAP NO 172 V
ARRANGED TO OPERATE AS VAPOR ONLY.

TRAP NO 173 P
ARRANGED TO OPERATE AS PRESSURE ONLY.

ARRANGEMENTS POSSIBLE WITH COMBINATION VAPOR AND PRESSURE THERMOSTATIC TRAP.

the diaphragm expands by reason of the hot condensation, valve "D" is now seated and the entire piping of the car is filled with steam under pressure. The action of the trap in releasing condensation from valve "D" is the same as described heretofore. Fig. 14 shows the trap with a permanent seat at valve "C" and with the valve "D" removed. This arrangement will provide for vapor heat permanently. Fig. 15 shows valve "C" removed entirely, which provides for direct steam only.

Directions for Operating.

In all average weather vapor operation is said to give sufficient heat. To obtain this, valve "A" should be opened wide enough to give the desired temperature and keep valve "B" closed.

In severe weather to heat a car quickly valve "A" should be opened and also valve "B." To cool the car down valve "B" should be closed. To shut off the heat valve "A" should be closed.

This system, it is claimed, meets all requirements as to regulation of temperature changes.

The Economy Car Heating System. (Steam): The purpose of this system is to utilize the exhaust steam from air pumps instead of live steam from the boiler of the locomotive.

As is well known, the action of the Air Pump on the road is intermittent, constantly stopping and restarting, which causés considerable condensation to take place in both the steam cylinder of the air pump and its steam supply pipe. This condensed water is discharged by the air pump upon each restarting, and, if carried into the heating system of the cars, would fill the radiators and pipes and prevent the cars from being properly heated. Serious damage would also result

from the freezing of this water in car radiators and pipes.

With the Economy Car Heating System the exhaust steam and water from the air pump is discharged into a Reservoir, and the water is prevented from passing into the train pipes and radiators. In the reservoir also all the water is re-evaporated into steam, and both the heat in the steam and the latent heat in the water exhausted from the air pump (otherwise wasted) are used for heating cars. It is claimed that, under this system, the average passenger train can be properly heated with the exhaust steam from the air pump without the use of live steam.

In case, however, the exhaust from the air pump should not be sufficient to heat the train, live steam to supply the deficiency is automatically drawn from the locomotive boiler. This condition might arise with limited express trains making but few stops, or with very heavy trains, in extremely cold weather. In this event, all the heat from the air pump exhaust would be utilized, and the boiler would furnish only the excess quantity of live steam necessary to heat the train.

The Economy Car Heating System is automatic. The "Relief Valve" is set at the maximum and the "Pressure Regulator" at the minimum pressures before the train is started, and the steam pressure in the train heating system is absolutely confined between these two pressures.

It is claimed that fuel and water are saved by the removal of the air pump exhaust from the stack, the discharge of the exhaust steam from the

air pump into the stack causing a constant draft on the fire and a considerable waste of coal. The noise from the air pump exhaust is avoided, which is an advantage of no little importance, especially with locomotives standing under covered stations.

Construction.—The Economy Car Heating apparatus consists of a reservoir, Three-way Cock, Fig. 16, and "E. C. H." Relief Valve, Fig. 17.

As the material for the pipe connections depends upon the respective locations of the air pump and reservoir, they can only be determined when actual measurements have been taken.

Pipe of the 1 ¼-inch size only should be used.

The reservoirs are made in four sizes, 44 inches in length, and 14, 16, 18 and 20 inches outside diameter, respectively; they are made of steel and carefully tested under 250 pounds pressure. They are first covered with asbestos cloth, then lagged with wood one inch thick, and fitted on the outside with an iron jacket.

The largest size of reservoir that will clear the cab line should be used, especially for locomotives hauling long or heavy trains. For trains consisting of not more than four cars a reservoir of the 14-inch size is amply large.

The reservoir should be attached to the running board directly under the cab and on the same side of the locomotive as the air pump, so that the pipe connecting the air pump and the reservoir will be the shortest possible. The location of the reservoir on the same side of the locomotive as the air pump is not absolutely necessary, and, in case the driver brake auxiliary reservoir, triple valve, sig-

nal valve, etc., are on the same side of the loco motive as the air pump the reservoir may be attached to the running board directly under the

Economy Car Heater Three-way Cock.

Economy Car Heater Relief Valve.

cab on the opposite side, and the exhaust pipe from the three-way cock carried back into the cab, across the boiler butt and down through the running board into the reservoir.

If the space on both sides is already occupied and it is impossible to locate the reservoir below the running board directly under the cab, and on locomotives having the Wooten type of firebox, the reservoir should be attached below the running board forward of the air pump.

The reservoirs have two openings in one end and one opening in the other end. The reservoir should be placed with the end having the two openings at the forward end, and the single opening on the rear end at the lowest point. A pipe should connect from the single opening on the rear end of the reservoir direct to the train heating pipe under the locomotive tender.

The three-way cock should be located in the exhaust pipe of the air pump and close to it, fitted with a rod leading back into the cab and a handle convenient for operation by the engineer. A pipe should connect from the three-way cock to one of the openings in the forward end of the reservoir. Quarter-turns and tees should not be used with the pipe leading from the three-way cock to the reservoir, but the pipe should be bent if necessary. A pipe should be connected from the other, or third opening, in the three-way cock to the stack or saddle.

A pipe connects from the direct steam pressure regulator to one of the openings in the forward end of the reservoir and from this same pipe a pipe should be connected to the "E. C. H." relief valve. A pipe should be connected from the "E. C. H." relief valve to vent the surplus steam

either through the roof of the cab or forward into the saddle or stack, as may be preferred.

When the Economy Car Heating system was first introduced an ordinary open pop valve, located outside, on top of the locomotive cab, was used as a relief valve to vent the surplus pressure from the train heating system. Experience demonstrated that an adjustable relief valve, conveniently located for operation by the engineer inside the cab, was both desirable and necessary to enable him to vary the steam pressure to suit trains of different lengths. A steam pressure of 20 pounds would be ample to heat a train of two or three cars, but a steam pressure of 40 pounds or more might be necessary to insure a circulation of steam at the rear end of very long and heavy trains, especially in extremely cold weather.

The "E. C. H." relief valve, illustrated in Fig. 16, is an improved form of valve with a duplex spring, especially adapted for the Economy Car Heating System. It is located inside the cab, with its pipe connections so arranged that the surplus steam from the train heating system will be discharged either through the roof of the cab or into the saddle or front end of the locomotive, if it is desired to avoid the noise and annoyance of the escaping steam. The merits claimed for this valve are the increased range of steam pressures at which it will work satisfactorily without change of spring and the ease with which it can be adjusted for any desired change of working steam pressure. It is also claimed that it will gave an automatic and full relief at any steam pressure between 15

and 60 pounds per square inch. This is accomplished by the duplex spring, the outer spring being under tension at all pressures, while the inner spring (of smaller diameter) is under tension only at the higher pressures.

The springs are adjusted for the valve to relieve at the desired pressure, by means of a hand wheel on the top, outside of the valve body. To obtain a higher working pressure, the cross bar check nut should be slackened and the hand wheel turned from left to right; for a lower working pressure the hand wheel should be turned from right to left and the cross bar check nut tightened.

Another important feature of the "E. C. H." relief valve is that it can be taken apart and cleaned, if necessary, without disconnecting the pipe connections at either the inlet or outlet.

An objection to the use of exhaust steam from the air pump has been that it increases the back pressure on the pump. To overcome this the Economy Car Heating System uses a by-pass valve (Fig. 17a), which automatically prevents the back pressure in the pump from becoming excessive. This is accomplished by allowing the exhaust steam to expand into the receiving tank *B* of the steam heating system (Fig. 17b) until its pressure has reached a certain point, after which the by-pass valve will automatically close the connection to the receiving tank and allow the pump to exhaust to the atmosphere.

The by-pass valve (Fig. 17a) consists of pistons *D* and *E*, a check-valve *F*, a cut-out piston *G* and a dash pot *H*. The pistons *D* and *E* are 5 inches

and 1½ inches in diameter, respectively, and both are provided with two packing rings each to eliminate leakage. They are placed on the same stem and act against each other. The larger one controls the flow of the exhaust steam through the ports *L* to the heating reservoir *B* and the smaller controls the exhaust through the ports *N* to the atmosphere. The check valve *F* is located in the body of the valve and controls the connection between the heating reservoir and the under side of piston *D*. When free, it is held closed by the spring shown, and is so arranged that its stem comes in contact with the under side of piston *D* when it is at one-half stroke. Thus it will be seen that when the piston *D* is below half stroke the check valve *F* opens the connection between the under side of the piston and the heating reservoir. The cut-out valve *G* is located at the bottom of the by-pass valve and is operated by the main reservoir pressure, which is controlled by the three-way cock *S* on the engineer's side of the cab (Fig. 17c). When *S* is open the cut-off piston is raised and with it the two pistons *D* and *E*. This cuts out the connection between the air pump exhaust and the heating reservoir and opens the connection to the atmosphere. The dash pot *H* is provided with a heavy spring to prevent the severe hammering of the piston *D* and *E* when the exhaust is released to the atmosphere.

It will thus be seen that the arrangement is both automatic and under the control of the engineer. When operating automatically the exhaust steam enters the by-pass valve, as shown, and forces

piston *D* down, allowing the steam to expand into the heating reservoir *B*, which supplies the heating system. As previously stated, the reservoir is connected to the under side of piston *D* when it is in its lower position. As the pressure above and below the piston *D* becomes equalized near the end of the pump stroke the upward force will be greater on *D*, on account of the lifting pressure on *E*, and will cause *D* to be raised, thus closing the ports *L* to the heating reservoir and opening the ports *N* to the atmosphere. As these ports open and suddenly relieve the pressure above *D* the check valve *F* closes and the piston is raised only by the expansion of the steam remaining under *D*. This tends to reduce the force of the blow on the dash pot *H*, which, with the springs, prevents any disastrous hammer blows.

Live steam is fed to the reservoir *B* through the reducing valve *P* to insure a supply of steam in case the pump is cut out or does not supply sufficient steam for the heating system. This valve may be set to any desired pressure. To prevent the exhaust from the air pump raising the pressure in the reservoir *B* to a point higher than the steam line will stand, the relief valve *R*, set for a pressure approximately 10 pounds higher than the reducing valve *P*, is provided.

Service tests have been made on this system which have demonstrated that while from 70 to 75 per cent. of the steam used in operating the air pump is utilized, there is no appreciable difference in the speed of the air pump or the amount of steam used. The new equipment is in successful

By-Pass Valve for Air Pump Exhaust Steam Heating System.

Piping Arrangement for Air Pump Exhaust Steam Heating System.

use on a number of roads and is claimed to make car heating by the use of the air pump exhaust steam practicable.

OPERATION.

Before the train is started adjust the Pressure Regulator for the minimum pressure and the "E. C. H." Relief Valve for the maximum pressure required to heat the train. The steam pressure on the train heating system will therefore be confined between these two pressures.

Pull back the handle of the three-way cock, to discharge the exhaust steam from the air pump into the reservoir, and open the boiler valve in the direct heating system.

To shut off the steam from the train, close the boiler valve and push the handle of the three-way cock forward to discharge the exhaust from the air pump into the stack or saddle.

The three-way cock must be kept in either the extreme forward or back position, as any intermediate position would close the exhaust pipe from the air pump.

To increase the pressure on the train heating system, slacken the cross bar check nut of the "E. C. H." relief valve and turn the hand wheel from left to right; to decrease the maximum pressure, turn the hand wheel from right to left and tighten the cross bar check nut.

It will be found that average trains can be properly heated with the exhaust steam from the air pump without opening the boiler valve in the direct steam heating system. In case, however, the air pump exhaust is not sufficient to maintain the required pressure, open the boiler valve and the pressure regulator will furnish live steam to supply the deficiency.

GOLD'S IMPROVED SYSTEM OF HOT WATER CIRCULATION:—This apparatus consists of two duplex coils placed in a Baker or similar heater. It is illustrated in Fig. 18. The outer and inner pipes end in fittings designed for the purpose. As illustrated by Fig. 19, the smaller pipe not only passes through the entire length of the larger pipe, but it extends a short distance beyond the latter. When circulating pipes are filled, the water occupies the space between the outside of the smaller pipe and the inside of the larger pipe. If fire is

used, the water is heated by direct contact of the outer pipe. When steam is used, the water is heated by the inner pipe. Steam may be used independently of fire, or both may be used together.

The convenience of this arrangement is not alone in its adaptability for use with either fire or steam, but in the ease with which any class of car may be piped.

From the special fitting at the top of each of the coils one and one-quarter inch pipes connect to the inlet of the sealed jet. A short and heavy brass nipple is run from the top of the jet to the expansion drum. From the bottom, outflow pipes take their course around the car and return to the coil, as shown. Fig. 20 shows how one port of this bend is carried through and inside the other and slightly tapered at its end. The heated water passes up through the riser pipe and enters the inlet of this sealed jet. It then moves around the bend, and owing to the taper of the nozzle and the energy behind, is forced downward into the outflow pipes with much velocity. Any air that may be mingled with the water naturally separates at the jet and passes up to the drum. The purpose of the small hole near the top of the directing bend is to release any air that might otherwise accumulate at this point when the pipes are being filled with water.

Steam is taken from the train pipe through a one and one-quarter inch pipe to the inside of the car. From this point a one-inch pipe is carried to the top of the heater, where two separate valves

Gold's Improved System of Hot Water Circulation.

Gold Steam Coupler.
Gold End Train Pipe Valve.
Gold Temperature Regulator.
Strainer Tee.
Low Coil.
Gold Improved Tee Trap.
Sealed Jet.
Ideal Safety Valves.
Car Gauges.
1" Supply Valves.
Strainer Nipple.
2" x 2" x 1½" Tee.
Two 1½" 45° Ells.
1½" R and L Coupling.
1" R and L Coupling.
1¼" R and L Ell.
1¼" x 1" Ell.
1" Ell.
1" R and L Ell.
1" x 1" x ¾" Tee.
1" Tee.
1¼" Ell.
1½" x 1" Ell.

Fig. 19

Fig. 20

Gold's Improved System of Hot Water Circulation.

Gold Steam Coupler.
Gold End Train Pipe Valve.
Gold Temperature Regulator.
Strainer Tee.
High Coil.
Heat Trap.

1¼" R & L Bll.
1¼" x 1" Bll.
1" Ell.
1" R & L Ell.
1" x 1" x ¾" Tee.
1" Tee.
1" R & L Coupling

STRAIGHT STEAM, with heaters. This refers to a car heated by steam from train pipe and by stoves, the stoves having no connection with circulating system.

STRAIGHT STEAM, without heaters. This refers to a car heated by steam from train pipe, with no other means to heat car.

HEATERS WITH TRAIN PIPE. This refers to a car without any piping inside of car, which depends entirely on stoves for heat, but has train pipe for conveying steam to other cars in train.

THE BAKER STEAM ATTACHMENT (*Old Style*). —By this arrangement steam, instead of fire, in the Baker Heater may be used, if desired, to heat and circulate the water, or both steam and the fire may be used at the same time, when necessary to heat up quickly.

TO OPERATE.

The steam should be turned on and off by the angle valve placed at the top of the half-inch supply pipe. The position of this valve is such that all water from the condensed steam will run from it.

The steam should be turned on slowly. The best results are obtained with only 15 to 20 pounds pressure of steam.

No "trap" is used for the release of the water of the condensed steam, but instead a simple blow-through valve on the drip pipe is operated inside the car. The seat of this valve has a small groove, which allows the escape of the condensed water, thus preventing freezing. This valve should be left slightly open while steam is being used.

TO OPERATE.

THE BAKER STEAM ATTACHMENT (*New Style*).—The steam should be turned on and off by the globe valve placed on the ⅜-inch supply pipe at the top of the 3-inch wrought iron pipe cylinder. The position of the valve is such that all water from the condensed steam will run from it.

The steam should be turned on slowly, about 15 pounds pressure. When all the pipes have attained the desired heat, the attachment will maintain it with from 5 to 7 pounds of steam.

No trap is used for the release of the water of the condensed steam, but instead a simple blow-through valve on the drip (which is ⅜-inch) is operated inside the car. The seat of this valve has a small groove, which allows the escape of the condensed water (even if the cock should be closed), thus preventing freezing. The valve should be left open about one and a-half turns while steam is being used. A pressure gauge should be used on all steam attachments, so the pressure of steam can be seen.

REPAIRING BOTH THE SINGLE COIL AND THE TWO-COIL FIREPROOF HEATERS.—The fire grate and grate support—the only parts likely to give way—are readily removed and replaced through the ash-pit door. They are put in place by being hooked on, and are removed by being lifted off. But in order to renew the generator coil or coils, or fire-pot of the double coil heater, it becomes necessary to disconnect the heater from the piping. It should be removed from the closet, the heater turned bottom side up and the bottom of the steel inclosure removed by unscrewing the bolts in the flange. In replacing this bottom the asbestos sheets and other parts should be put back exactly as before.

The regulator bowl seldom, if ever, needs attention, as its steel diaphragm has a copper duplicate on both bottom and top sides to prevent corrosion. But it can easily be taken apart by unscrewing the bolts in the rim.

THE SAFETY PLATE AND GAS PREVENTER COMBINED (*Not on the Old Style Baker Heater.*)—This is over the fire chamber, and should be kept fastened down at all times, except when putting on coal. This is to prevent the fire spilling, in case of accident. It also prevents coal gas from escaping into the car.

If a safety vent blows out, the fire should be drawn at once and another vent put on. The bushing should be kept to use again. The "vent" should be screwed on and off, BY HAND, and the water renewed. Lack of water is what usually causes the "vent" to blow off; generally about six gallons are blown out.

On the old style Baker Heater the "safety valve" consists of a rubber ball held between two brass

plates. The screws holding the plates should be left the same as when first put in. Every time it has blown off, or leaks, a new rubber ball should be substituted. This vulcanized rubber ball is not, however, reliable as an "over-pressure" relief.

The water should be renewed by the combination cock in the drum, through the small funnel attached, and when all pressure is off. The funnel should be left turned down after the water is renewed.

Regarding the Pressure Gauge (*Sometimes used*). This gauge indicates the pressure in the heater, but not the degrees of heat. If the heater is in order, and the directions for its management fully carried out, no excessive pressure can occur.

The least pressure at which the heater can be operated the better.

[illegible]

With the Commingler System, open trap and dial cock, and if overflow pipe is clear, condensation will commence to escape shortly after steam is turned on. When condensation appears, regulate the amount of steam required (which is 15 pounds) by dial cock. On cars fitted with direct steam, open steam inlet valve from train pipe on each side of car, and after steam circulates in radiating pipes on side of car, and escapes at drip, shut drip valve, leaving sufficient opening for condensation to escape to prevent pipes from freezing. Do not ask the engineer to vary the steam pressure for the purpose of regulating the temperature of cars. Traps should be set at terminal points, so that a little steam will escape with the water. Readjustment is seldom necessary.

To reduce the temperature in a car with the direct or straight steam system, the steam on one side of car can be shut off, taking care first to open drip valve to allow the steam to escape, then leaving the drip valve open; close the valve that admits steam from the train line, thus preventing any further supply from entering. Coaches having toilet rooms on ends of cars, however, require care that when the steam is shut off the toilet rooms do not get so cold as to freeze the water pipes that are used for toilet purposes. The temperature of the car can also be regulated by only partially opening the inlet valve, say, one or two turns, which, in mild weather, will furnish all the heat required.

THINGS TO BE OBSERVED WHEN CHANGING ENGINES.—When approaching points where engines are to be changed, the trap and dial cock on cars fitted with the Commingler System should be closed, to prevent water syphoning from expansion drum into train pipe. When this has been done, the rear train pipe valve should be opened (which should be done when train is about one mile from station), also shut off on engine, so hose can be safely uncoupled. If train is over six cars in length, and engine is to be cut off, the steam valve inside of cars should be closed when equipped with the Gold or Straight Steam Systems, to facilitate the steam passing out through the train pipe. After the engine is coupled to the train and steam has passed through the train pipe, open steam valve inside of car, which will allow the steam to again circulate. If this rule is followed, unnecessary detention of long trains waiting for steam to pass through train pipe will be avoided.

DIRECTIONS FOR CLEANING.—Every car equipped with the Baker Heater, Gold or Commingler System should have the circulating system thoroughly cleaned out at least once a year. This is especially necessary where water containing more or less dirt is used when filling heater pipes. The date of cleaning should be stenciled on the door of the heater room, or on the side or end of the car adjoining the heater, when the heater is not enclosed. Ordinarily this cleaning is done when the car requires general repairs, but in no case should the period between cleaning exceed

12 months. The changing of water in the Steam Heating and Baker Heating Systems should not be considered as a cleaning out of these systems.

To clean out the Gold System, proceed as follows: Remove all plugs from draw-off pipe, attach hose to bottom connection leading to coil and thoroughly blow all water and sediment out with steam; when done connect hose to water hydrant and recharge. It is necessary to do each side separately. Cars requiring general repairs, the strainers on branch pipe leading from train pipe should be examined, also strainer in heater room. The pressure regulator should be taken apart and all parts examined and tested and regulated for 20 pounds, new discs applied to angle valve in stove room, also all valves packed and steam gauges tested. Automatic drip examined and adjusted. To thoroughly clean out Commingler, proceed as follows: Disconnect the pipe above the Commingler and remove the Commingler from the Baker Heater System, connect one end of a hose to a water hydrant, and the other end to the pipe which leads to the expansion drum, so that the full pressure from the water works can be forced into the expansion drum, thence around through all of the heating pipes and out at the upper end of the Baker Heater coil, a discharge pipe or hose having been first connected to the upper end of the Baker Heater coil to remove the water from the car. While the water is circulating through the pipes in the car, tap them lightly with a hammer to insure that the dirt and scale on the inside is jarred loose and washed out. This is very necessary at the cross-over pipes and the Baker Heater coil, as dirt is most liable to lodge at these points. The water should be allowed to flow for some minutes after tapping is finished, to make sure that the dirt and scale is thoroughly washed out of the pipes and expansion drum.

To take the Commingler apart, first unscrew the large plug in the base of the Commingler. The steam nozzle should then be taken apart and carefully cleaned, and any pieces of rubber or dirt that may have lodged within the nozzle removed. The pipe carrying steam into the Commingler should be inspected to see that everything is clean and free from obstruction. When all parts of the Commingler are cleaned, it can again be assembled by placing the copper screen in position and screwing the plug into the base. It is then ready for remounting in its position above the Baker Heater.

In connecting the Commingler with the Baker Heater System it should be placed as close to the top of the Baker Heater coil as possible, and the pipe from the top of the Commingler should pass direct to the expansion drum. The overflow pipe should be carried up into the expansion drum, and under no circumstances must it be less than 10 inches from the connection of the Commingler pipe to the overflow pipe connection. If the connections are not kept this distance apart there will be an excessive loss of water through the overflow pipe, on account of the upper end of the overflow

pipe being in the mound of water which forms directly over the Commingler pipe.

The overflow pipe should also be disconnected and the overflow cap withdrawn from the expansion drum. This cap must be examined carefully to see that the opening of about three-sixteenths of an inch through it is not closed by dirt or other obstruction.

The trap cock should also be inspected and tested. When closed, it must be perfectly tight, and when open, the hole through it should just permit a wire of one-eighth of an inch in diameter to pass through freely. When testing this cock it must be subjected to water pressure of about 250 pounds for at least 20 minutes. Warm water should be used, and the cock must be perfectly tight under these conditions. The dial cock, which is located in the steam pipe, must then be inspected and tested. This cock should also be perfectly tight at the same pressure, and under the same conditions, as given for the trap cocks. If these two cocks are not tight, and cannot be tightened with a slight tightening up of the flange bolts, they should be removed for refitting, and cocks which are tight applied in their positions.

Both the three-quarter inch check valve and the small check valve at the top of the relief pipe should be inspected to see that they will open freely, that they will close tight, and that they are free from dirt.

The strainer in the pipe, which carries steam from the train pipe to the Commingler, should also be removed by first removing the plug in the strainer casing, and the strainer and casing thoroughly cleaned, and the openings in it freed from all obstructions.

On cars which have the Baker System only, the piece of pipe connecting the top of the coil to the expansion drum should be removed, and the pipes cleaned out thoroughly.

After the parts have all been connected in their proper positions, the Baker Heater System should be filled from a hydrant by means of a hose attached to one of the drain cocks or plugs under the car, the other drain cock or plug being left open; when water runs freely from this open cock or plug, it must be closed, and more water supplied until it runs freely out of funnel cock, and, if a Commingler System, also through overflow pipe. The hose should then be connected to opposite drain cock or plug and water again turned on until it overflows freely, in order to drive out any air which may have lodged in pipes. These instructions must be strictly observed when filling pipes on a car from which, for any reason whatever, the water has been withdrawn.

QUESTIONS AND ANSWERS ON STEAM HEATING APPARATUS OF PASSENGER TRAINS.

Q. What is the Gold Duplex system?

A. A hot water system, the water being heated by specially constructed duplex coils, the steam passing through the inner coil, and the water circulating in the outer two-inch coil.

Q. What is the direct or straight steam system?

A. A system of heating wherein steam enters the radiating pipes on both sides of car, direct from the engine, through connections from the train pipe, no hot water circulation being used.

Q. What is the Commingler system?

A. It is a hot-water system, the water being heated by steam supplied from engine. The steam is mingled with or infused into the water by means of a commingler of special construction, which prevents any noise in operation, but this system is not much in use.

Q. What is the vapor and combination vapor and direct steam system?

A. A system which admits of using vapor (so called; it is really steam not under pressure) or direct steam, or both in combination.

Q. What advantages has steam heat over stove heat?

A. Safety to passengers and coaches, and economy of operation.

Q. How is steam conveyed from the locomotive to each car?

A. By means of a train-pipe, which connects each car with the engine. By a branch leading from the train pipe to the inside of car it is connected to the different systems of radiating pipes.

Q. How are cars heated when for any reason steam cannot be obtained from the engine?

A. The train pipe should be blown out in same way as is done at terminal points, the steam hose uncoupled between cars and fires lighted in the Baker Heaters.

Q. What is a Baker Heater?

A. A stove in which part of the circulating pipe is placed in the heater in the form of a coil, so that when a fire is in the stove the water in the coil is heated and circulation is set up to the drum and radiating pipes inside the car.

Q. What makes the water circulate?

A. Gravitation and heat. The two circulating pipes are connected with an expansion drum, which is placed on the roof of the car. One pipe is called the riser and the other the down flow. The riser pipe connects the upper part of the coil in the stove to the expansion drum; the down-flow pipe runs from the drum to the floor of the car, where it is passed four times the length of the car and connects to the lower end of the coil in the stove. These pipes and the expansion drum are filled with water, and when there is a fire in the stove the coil is heated sufficiently to boil the water, which then rises to the expansion drum. The water in the down-flow pipe, being heavier than that in the riser pipe, moves downward, forcing the water through the pipes in the car and returning through the coil in the stove, where it again comes in contact with the heat from the fire.

GOLD SYSTEM.

Q. Is the process of circulation the same when using the Gold system as that described in the Commingler system?

A. Yes; with this exception: That with the Gold system the live steam is not admitted directly into the hot water circulating pipes.

Q. If pipes on one side of car heated by the Gold system are hot and the opposite side cold, where would we look for the trouble?

A. To stove room, first to see if steam valve is full open. If found O. K., try drip valves to see if they are not frozen or shut too tight. If drip valves are working properly, the side that is not heating must be short of water, and the expansion drum will indicate this when tested by the filling cock on drum.

Q. What would cause one side to heat and the other not?

A. As each side is independent, one drum having sufficient water would not help the opposite side to circulate, and the only remedy is to raise the water to the correct level in both expansion drums.

Q. What is the lowest circulation level of the Gold system?

A. As this system is fitted with an accelerator fitting placed below the expansion drum, it is possible to get circulation, if the water is below the expansion drum, but it must always be above the level of the accelerator fitting or circulation will stop.

Q. Has this system any advantage over the ordinary way of fitting cars?

A. Yes, it gives a quicker circulation, also requires only one pipe to be attached to expansion drum, as the water returns inside of the accelerator fitting to the down-flow pipe and again circulates through the pipes on the side of car.

Q. What causes shortage of water in circulating pipes?

A. The principal causes are draw-off plugs under the car, safety valves or the filling cock connected to drums leaking.

Q. How is it possible to replace this water in the expansion drum of the Gold system?

A. By means of the funnel cocks, which are connected to the expansion drums, pouring in as much water as possible.

Q. Is it possible to fill the drum too full by this method?

A. No, as the filling cocks are connected to the drums on the centre line the water will only flow to that level.

Q. Can this drum be filled any other way?

A. Yes, by removing the safety valve and pouring water direct into the drum, being sure to open funnel cock at the same time, so that drum will not be overcharged; water flowing out of funnel cock indicates sufficient water in expansion drum.

Q. What bad effect would be had by overcharging the drum?

A. It would prevent a circulation of water and the pipes would remain cold.

Q. What is the use of an expansion drum?

A. The circulating or expansion drum being placed at the highest point of heating system, is used as a reserve storage for water, to supply any leaking that may occur in the circulating pipes.

Q. By opening the drip is it possible to blow any water out of the Gold system expansion drum?

A. No; the drip is connected to the inner or steam coil, and the expansion drum to the outer or water coil.

Q. Can we condense any water for the Gold system expansion drum by closing the drip?

A. No; this can only be supplied through the funnel cock, which is attached to the drum.

Q. What is the use of the regulator on the Gold system?

A. It may be adjusted to maintain any pressure from vapor to 20 pounds, and is adjusted by the trainmen as required to maintain a proper temperature in the cars.

Q. What temperature should be maintained in passenger cars?

A. About 70 degrees, with proper ventilation, which latter is very important.

Q. If steam is passing out of drip on the Gold system, is it a sure indication that car is working O. K.?

A. No; it is possible for drip to work O. K., but unless the water circulation is in order this system will not work satisfactorily.

Q. How can we tell when the car is working properly?

A. By feeling the radiating pipes in car; if all are hot, the water circulation is in good order.

Q. If all efforts fail to get car to heat properly, and water in pipes is liable to freeze, what should be done?

A. Open draw-off cocks under car and the funnel cocks in the drums, and allow the water to drain out; unless the funnel cocks on drums are opened water cannot escape. If pipes are already frozen, and water will not run off, break an elbow or return bend inside of car so as to save as much pipe as possible. With the Gold system it is necessary to drain both sides, and to do that right open the four draw-off cocks or plugs under the car; then open the funnel cocks on both drains.

Q. What is the correct temperature of a sleeping car at night?

A. Between 60 to 65 degrees, but the temperature of the car cannot be regulated as quickly as the steam is reduced or increased by the angle valve. The temperature of the car depends on the pipes on sides of the car, which, being filled with water, cool off and heat up slowly, so that time must be given to permit the cold water to heat up, or the hot water to cool off, as required.

Straight Steam.

Q. Where are the folowing parts located (*a*), and what are their functions (*b*) locomotive valve?

A. (*a*) At the steam box in a cab or other source of dry steam supply. (*b*) To control the supply of steam to train pipe.

Q. Reducing valve?

A. (*a*) In cab. (*b*) To control the pressure of steam in the train pipe.

Q. Train pipe?

A. (*a*) Underneath tender and cars. (*b*) To conduct steam to the cars.

Q. How should the train pipe be applied?

A. So as to drain to each end of car, thereby avoiding pockets for the collection of condensation water, the prescribed measurements being closely followed in locating the ends of train pipes, in order to prevent the couplers from opening on curves.

Q. Steam couplers?

A. (*a*) At ends of train pipe. (*b*) To connect train pipes between cars.

Q. Steam coupler safety chain?

A. (*a*) Under platform buffer timber; in accordance with standard measurements. (*b*) To prevent the steam coupler from being injured.

Q. Train pipe valve?

A. (*a*) At ends of train pipes, in accordance with standard measurements. (*b*) To close rear end of train pipe, and to control same without disturbing passengers, also for protection in handling steam couplers.

Q. Inlet regulating valve?

A. (*a*) Inside of cars—usually at heater room with cars having a Baker Heater, and at inlet of radiators of cars having direct steam. (*b*) To supply steam to heating jackets or direct steam pipes and to regulate the temperature in car.

Q. Steam traps?

A. (*a*) Horizontal Trap No. 833 is underneath car at the lowest point in the steam transfer pipe, and should have a drain of two inches. (*a*1) Vertical Trap No. 933 (used with direct steam only), at the lowest point in the steam radiators, extending through the car flooring. (*b*) To automatically discharge the condensation water from the heating jackets or direct steam heating pipes.

Q. Trap blow-off valve?

A. (*a*) At the inlet end of trap. (*b*) To discharge the accumulation of dirt and scale from the trap.

Q. Trap adjustment?

A. (*a*) At the lower end of trap. (*b*) For setting so as to allow a little steam or vapor to escape with the condensation water.

Q. When should the trap be set?

A. When cars are tested with steam previous to being placed in service.

Q. Why?

A. So that it will not be necessary to adjust the trap on the road.

Q. How should the trap be set?

A. First open the adjustment wide; then, after all pipes have become hot, close it down until a litle vapor escapes with the water of condensation.

Q. What causes the trap to operate automatically

A. The difference in expansion between the brass tube and the iron shell enclosing it.

Q. When should the reducing valve in cab be set?

A. When the engine is placed in service.

Q. At what pressure should the reducing valve be set?

A. Forty pounds.

Q. Under what conditions should the pressure on reducing valve be increased?

A. When there are more than eight cars, adding five pounds for each additional car in zero weather.

Q. Should the reducing valve on engine be closed?

A. It should never be used as a shut-off valve.

Q. What valve should control the supply of steam to train pipe?

A. The locomotive valve.

Q. When should the locomotive valve be closed?

A. Five minutes before arriving at points where engines are to be changed, or terminals where train is to lay up, and always before hose are uncoupled.

Q. Should the locomotive valve be closed under any other condition?

A. Never while heat is required in the cars, except in cases of emergency.

Q. Why?

A. To prevent condensation water in train pipe from freezing.

Q. When should steam be admitted to train pipe?

A. After all steam hose are coupled and all inlet and train pipe valves are open, signal the engineer to open locomotive valve.

Q. What is the next move?

A. Close end train pipe valve on rear car after train pipe is thoroughly blown out.

Q. How is the end train valve operated?

A. By the extension handle operated at step side, or through an opening in step riser, thereby preventing the passengers from tampering with same from inside of vestibule.

Q. When should the condensation water be blown out of the train pipe?

A. When the train is made up, also on approaching and before leaving point where engines are changed or the train laid up, and occasionally on the road, the rear valve only being used for this purpose.

Q. When should traps be adjusted?

A. Traps should be inspected often, to see if a little steam or vapor is being discharged with the water of condensation and reported at terminals if not working properly. Only adjust traps on the road when absolutely necessary.

Q. Why should a little steam issue from the rear train pipe valve on the road?

A. To prevent the accumulation of condensation water and to have live steam throughout the entire length of the train pipe in order to avoid freezing.

Q. How should temperature in cars be regulated?

A. By adjusting the inlet valve.

Q. When the steam supply is cut off from cars having Baker Heaters, what should be done?

A. A fire should be started in the heater.

Q. What test or inspection should be given the parts following:

Q. Reducing valve?

A. It should be taken apart and thoroughly cleaned, oiled and tested before the steam heat season opens.

Q. Gauge?

A. Should be tested with test gauge before season opens and occasionally in service.

Q. Valves?

A. Before season opens, all valves and seats should be repaired, or renewed if necessary, and all valve stems repacked.

Q. Traps (horizontal and vertical)?

A. Remove adjustment from low end and valve from high end of trap, allowing steam to blow through until thoroughly cleaned, and renew discs if necessary.

Q. Steam couplers?

A. These should be removed from cars at the end of the season and stored at the shop after being repaired and tested and made ready for the next season. Cap or plug the opening in the end train pipe valve.

Q. What is the proper method of filling heater pipes with water?

A. At the beginning of the steam heat season open all draw-off cocks on water circulating pipe. After water is drained, blow steam through water circulating pipes, making attachment at draw-off cocks nearest heater. When pipes are clean, shut off steam, close draw-off cocks, remove safety valve in circulating drum and run a half-inch pipe thence to a coil in a barrel of water. Then turn on steam again and boil water in barrel. After this disconnect steam and close draw-off cocks and the water in barrel will syphon into and fill circulating pipes. After standing some time, the water, having cooled, will contract to some extent and a small amount of water may then be poured in through the combination cock. Then turn on steam at inlet valve, and if water circulates quickly the pipes are properly filled. If water does not circulate properly, let water out of pipes and repeat operation.

Q. How often should inspections be made to ascertain that water is at the proper height in circulating drums?

A. During the heating season they should be examined when cars reach terminals or yards.

Q. Should Baker Heater pipes be kept filled with water during summer?

A. Yes, as they will not rust so rapidly as when empty.

Q. What are the duties for which the following employes are usually held responsible:.

Q. The repair shop employes?

A. For the proper application of and for the thorough overhauling and testing of the heating apparatus when cars are in shop.

Q. The engineer?

A. For turning steam on or off at the locomotive valve when the prescribed signals are given, and for supplying the proper amount of steam for heating the train.

Q. The conductor?

A. For knowing the pressure of steam supplied to the train and seeing that the proper temperature and ventilation is maintained and knowing that the other members of the crew are familiar with the operation of the steam heating apparatus.

Q The brakeman or flagman?

A. For blowing the condensation water out of the train pipe before arriving at terminals or stations where engines are to be changed, also at stations where there are no car inspectors, and for leaving all valves open when cars are to be laid up.

Q. The roundhouse inspector?

A. For the condition of the steam heating equipment on the engine before it leaves the roundhouse, and knowing that an extra steam coupler is carried.

Q. The car inspector?

A. For the condition of the car heating apparatus and for blowing the condensation water out of train pipe before trains leave terminals and stations; for knowing that an extra steam coupler is carried on train and for having a supply of steam couplers and gaskets on hand.

VAPOR SYSTEM AND COMBINATION VAPOR AND DIRECT STEAM SYSTEM.

Q. In what way does the system of combined vapor and direct steam of the Consolidated Car Heating Company differ from the direct steam heating system generally in use?

A. It differs in that there is no pressure at any time in the radiating pipes.

Q. What is vapor?

A. Steam not under pressure in the pipes or radiators.

Q. How is vapor admitted to the radiating pipes?

A. Through a trap located underneath the car; a branch pipe from the train line admits steam to a chamber in the main casting and this chamber partly surrounds the trap.

Q. What is the special purpose of this chamber?

A. It gives the trap the protection of live steam at all times, the heat preventing freezing of the condensation which passes through the trap.

Q. At what point does the condensation enter?
A. At the drip port, and it falls upon a diaphragm when passing out.
Q. What effect does this have?
A. The hot water causes the diaphragm to expand, thus raising the rod which rests upon it and temporarily closes valve C.
Q. What does the closing of this valve effect?
A. While it remains closed no further steam is admitted to the system.
Q. How is valve C again unseated?
A. As the diaphragm is exposed to the outside air it cools rapidly and contracts again, thus unseating valve C, which permits steam to flow again into the piping.
Q. How long will steam thus continue to flow?
A. Until the diaphragm again shuts valve C. This operation is continued automatically and indefinitely.
Q. If for any reason it is desirable to raise the temperature of the car over that provided by the vapor system how is it accomplished?
A. Valve B should be opened, thus permitting steam to pass into the riser pipe at the train line pressure.
Q. When the diaphragm becomes expanded by the hot condensation what happens?
A. Valve D becomes seated and thus the entire piping of the car is filled with steam under pressure.
Q. How is valve D released?
A. By the same action as described in the release of valve C.
Q. Can this system be arranged to provide for nothing but vapor heat?
A. Yes; by entirely removing valve D, which makes a permanent seat at valve C and so provides for vapor heat permanently.
Q. Can this system be arranged for heating by direct steam only?
A. Yes; by entirely removing valve C this is accomplished.

CHAPTER XI.

LIGHTING CARS, GAS SYSTEMS: PINTSCH, ACETYLENE. ELECTRIC SYSTEMS: AXLE, THE DE LAVAL. QUESTIONS AND ANSWERS.

Along with other improvements the matter of lighting passenger cars has received the constant attention of railway managers, until, it may be truthfully said, that at this time the passenger coach is as well, if not better, lighted than the average house. In the early history of railways all sorts of quaint methods were employed for lighting cars. Upon one road an old fashioned lantern hung from the ceiling; on another, candles in primitive holders cast faint glimmers from the sides of the cars, but in time oil lamps came generally to be used; the lights were better and the lamps were more easily looked after.

The oil lamps have been succeeded in turn by gas and electricity. The essential requisites of train lighting are thus stated by the American Railway Association:

First—That sufficient light be afforded to enable passengers to read without difficulty in any seat in the car.

Second—That the light be obtained at reasonable cost.

Third—That the light be easily managed, cleansed and regulated by the trainmen, and that it shall not be peculiarly dangerous in ordinary use or in unskilled hands.

The following details of modern systems of car lighting will be interesting and instructive:

Gas Systems.

The Pintsch.—Pintsch gas may be described as a dry fixed gas with a high percentage of car-

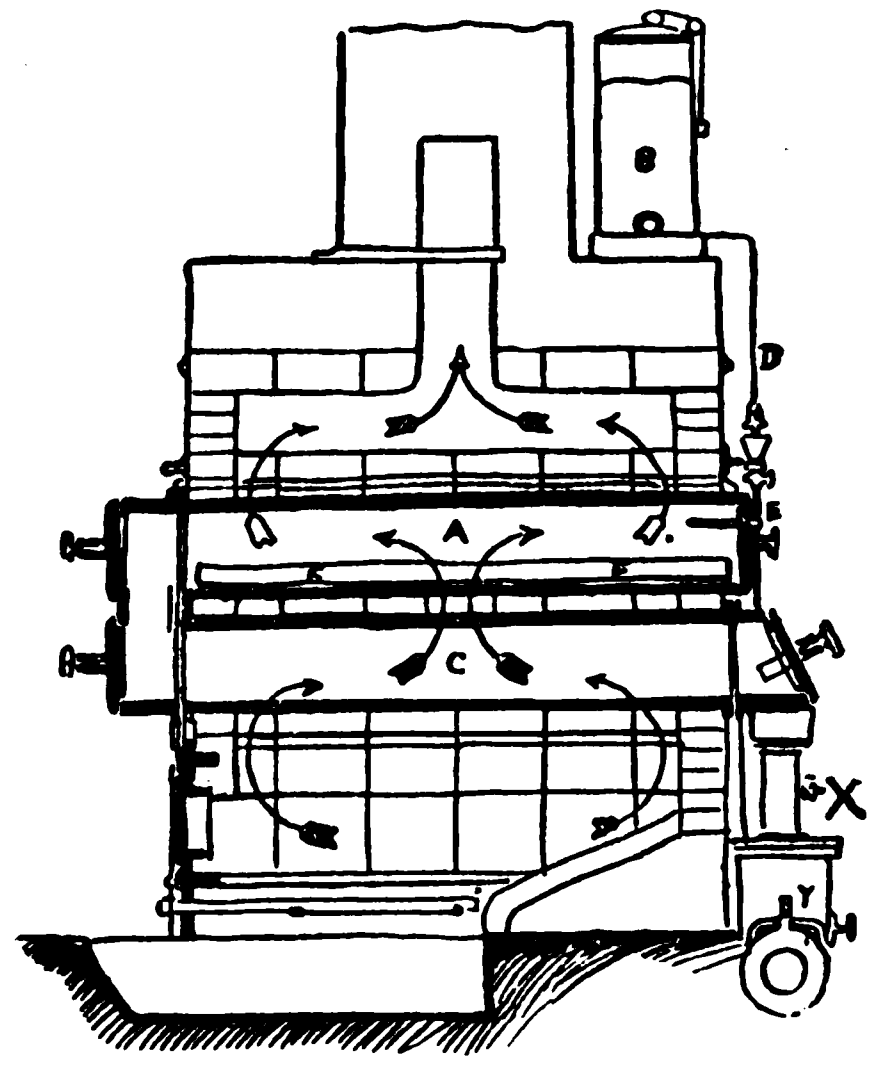

A. Upper retort.
C. Lower retort.
D. Micrometer cock.
E. Funnel.
FF. Iron pan
X. Trv-cock.

Fig. 1.

bon in its composition which has been compressed for storage and conveyance by a pressure varying from twelve to fifteen atmospheres. Ordinary gas

used for illuminating purposes cannot be so compressed owing to condensation. Pintsch gas is manufactured from crude petroleum.

In its manufacture the oil is pumped into a small storage reservoir in a retort-room, the amount being indicated by a gravity gauge. The retort-room is like a great oven with a cinder floor, and is kept very hot. Four or five workmen watch the mouths of the fire-pots. Over each furnace a double retort of iron is set in a wall of fire clay, and chimneys which lead upward from above it furnish the necessary draft.

From a storage tank the oil flows to the upper retort (A in the diagram, Fig. 1.), into which it drips through a micrometer cock and funnel (D and E). The bottom of the upper retort is filled by an iron pan (F), which is heated by the fire below to a very high temperature. As soon as the oil strikes this it is instantly vaporized, and in that form passes downward through the connecting headpiece to the lower retort (C), where a much greater degree of heat serves to bring it to the condition of a fixed gas. A try-cock is located at the end of the retort (X), by means of which it is ascertained if the gas is of the proper consistency. By allowing it to impinge itself upon a smooth steel surface—a palette-knife, for instance—it can be told whether or not the gas is of the required quality. If the test shows a deposit of oil it is known either that too much oil is entering the retort or that the heat is too low to vaporize all that passes in. If, on the other hand, there is a deposit of lamp-black, the oil is known to be

ant in use, and is acceptable in any situation only when regarded as of the highest adaptability thereto. For train lighting, it is said, it not only falls below acetylene in character, but its use is attended with greater difficulties than in stationary plants. However generated it becomes a direct and severe burden upon the locomotive, and makes a strong impression on the fuel supply. The storage battery is expensive and short lived; it is, moreover, heavy, and its transportation expensive. Its charging is a slow operation and possible only at points especially equipped for such service, and hence involves expense for hauling the car to the charging plant, sometimes for long distances.

In the "Adlake" acetylene system the water-to-carbide method of generation is utilized. The carbide is segregated into small masses, which are acted upon in succession. A limited quantity of water is used, and is contained in a separate tank and fed to the generator by gravity through a small pipe, the water feed being automatically controlled directly by the gas pressure, and is accomplished wholly without the use of movable mechanical parts. The gas generated at a temperature of about 200 degrees F. is led through a condensing coil, which drains back into the generator, then through a scrubber to a storage tank having a capacity of 6 cubic feet. From this tank the gas is distributed through the car, a suitable pressure regulator being employed. The water feed is cut off by a gas pressure of 1 pound and the machine blows off at 13 pounds, this pressure

being occasionally reached by reason of "after generation." The machine produces gas, therefore, only at the rate of consumption, whether but a single burner, or the full complement be lighted, the production of gas varying automatically.

The generating tanks or cartridges are charged with carbide away from the car and brought to it hermetically sealed. These generator tanks are of such size that the machine requires attention only at terminal stations. They are attached to the piping system of the car by locking mechanism co-operating with the valves in such manner that the latter cannot be opened until the tank connection is properly made, and this connection cannot be broken while the valves are open. Two generator tanks or cartridges are usually employed, both being in communication with the gas pipes, and the head of water is slightly differentiated for the two tanks so that their action is successive. The apparatus is located in a cabinet within the car, occupying a floor space of 13 by 28 inches. The generator tanks are installed by the same class of labor that fills the water coolers with ice. The water tanks of the machine are filled from above the car in the same manner as other water tanks. Extra generator tanks may be carried for use in case of emergency, and the substitution of a charged for an empty tank may be made at any time and without the slightest effect on the burning gas and without causing any escape of gas.

The problem of preventing the development of detrimental temperature in the water-to-carbide

system of generation is solved by the segregation of the carbide into small masses, and by preventing, by the form of the receptacles and the manner of feeding the water, the access of vapor to the carbide. By this means the generation proceeds slowly but continuously, and is accomplished by the action of water in liquid form only, so that there is but little chemical action at any time and hence but little heat, while the transformation of the water from liquid to vapor stores away the heat in latent form as it is developed. The result is a full yield of gas of excellent quality.

THE COMMERCIAL ACETYLENE.—In the Commercial Acetylene System the equipment consists of a steel tank or cylinder of proper size packed from end to end with porous brick or asbestos discs, which have the properties of eliminating all danger from explosion. Before charging with acetylene, acetone, equal to about four-tenths of the cubic capacity of the tank, is pumped into it, all of which is absorbed by the asbestos or porous brick. Acetone is a mobile, colorless liquid which is obtained by the destructive distillation of wood, and by the condensation of gases and products of incomplete combustion from wood distilleries producing charcoal. Acetone is closer akin to alcohol than any other ordinary substance. It burns if lighted with a match, but unlike alcohol, gives a smoky, yellow, illuminous flame. Its most important property is its ability to absorb acetylene, which property varies directly and enormously with the pressure under which the acetylene is applied. Acetone at atmospheric pressure and or-

dinary temperature will absorb 15 times its volume of acetylene. That is, one cubic foot of acetone will absorb 15 cubic feet of acetylene, and its power of absorption increases at the rate of one volume of acetylene for each volume of acetone for each pound increase in pressure.

While this property of acetone would be of interest to the scientists, it would not be of value for practical purposes of lighting if it were not for a further property of acetone saturated with acetylene under pressure. This further property is that the acetone will give up its acetylene upon the removal of the pressure, or will give up any part of its acetylene which it has absorbed, in direct proportion to the amount of pressure removed. That is to say, if acetone has absorbed 100 volumes of acetylene under 100 pounds pressure, it will yield up 5 per cent of the acetylene upon the reduction of the pressure from 100 pounds to 95 pounds, and so on until, all the pressure having been removed, all the acetylene will have been set free.

The importance of this will be apparent when it is seen how enormously the containing power for acetylene of any given container can be increased by first filling the container with acetone and then introducing the acetylene under pressure. This is especially valuable for storing acetylene, or for transporting it, as in railway light, etc.

The extent to which the holding capacity of a container is increased as reckoned in candle-power

hours will be better understood from the following:

A receiver 3 feet in diameter and 2 feet high has 14 cubic feet capacity. This would hold enough ordinary 20 candle-power city gas to supply a 5-foot burner for a little less than three hours, or about enough for one evening. If the city gas were compressed to 150 pounds pressure, which is the limit for ordinary city gas, the contents of the holder would supply a 20 candle-power light for 10 evenings. If the same holder were filled with acetylene gas at atmospheric pressure it would supply a 20 candle-power light for 10 evenings; if compressed to 150 pounds, for 100 evenings, and if to 600 pounds, for 400 evenings, or for more than 14 months. If, however, the receiver were first filled with acetone, and the acetylene introduced at 150 pounds pressure, there would be enough acetylene to supply a 20 candle-power light for four years, three months and four days, but if the acetylene were put in at 600 pounds pressure, the holder, which when filled with ordinary city gas at atmospheric pressure, would supply a 20 candle-power light for only one evening of about three hours, would supply the same amount of light for the same number of hours for 16 years, five months and 10 days.

It will be readily seen from the foregoing how it is possible to put 3,500 cubic feet of acetylene gas at 240 pounds pressure in a cylinder or tank 10 feet long by 20 inches in diameter, whose cubic capacity is but 22 cubic feet. In other words, under this system the tank described will contain

sufficient acetylene gas to properly light a Pullman car for seven round trips from Chicago to San Francisco without recharging.

The generating or supply plant consists of a Bournonville acetylene generator, a small holder, and an ordinary gas or air compressor operated by a small electric motor or steam engine. It is claimed it can be operated by one person.

Electric Systems.

Axle Light.—Under this system each car has its own complete electric lighting plant with available power and is independent of all other equipment. For the transmission of power a large number of devices have been tried, including gears, sprocket chains, friction pulleys, flexible dogs and belts. Belts appear to be in greatest favor. The problem of transmitting the power is difficult for the reason that there is both a vertical and lateral motion of the axle; the distance between centers is variable; the drive is exposed, more or less, to weather conditions and conditions of road-bed, and is subjected to violent shocks, flying stones and other objectionable circumstances.

Belts have a certain elasticity, that is lacking with gears and vibration and shock are not transmitted by them to any great extent. They do not require to be lubricated, and if the belt drive is properly designed they will run a long time and pull the load. When lost or worn out they may be economically replaced.

The second problem of difficulty is the satisfactory regulation of voltage. The voltage generated in a revolving armature depends upon the speed, and with a plain shunt-wound machine the voltage would vary with the speed to a greater power than one. As the speed of a railway train is constantly changing, it is, therefore, necessary to employ means to counteract the tendency of voltage variation. For this purpose, various forms of differential winding have been used. The voltage control used with the Consolidated "Axle Light" equipment is an automatic device, working on the rational principle of varying the resistance in the field circuit.

In the Consolidated "Axle Light" system the field rheostat is handled by a small electric motor with worm, wheel and ratchet mechanism actuated by any variation of the generator output from normal. The small motor is connected at all times to the generator and, therefore, runs only when the train is running, since it is not needed at other times. If the apparatus is kept in adjustment and running as intended, the voltage variation at the lamps will ordinarily be within three or four per cent.

With all "Axle" systems, and in fact, preferably with all systems of electric train lighting, a storage battery is used to provide for stops, layovers and while running at a low speed. In the Consolidated "Axle Light" system, the battery ordinarily provided has a capacity sufficient to supply all the lights on the car for a period of 10 hours. The battery is of very reasonable size

and weight, inasmuch as, with the close control of voltage, it is impossible to make use of high efficiency lamps. The lamps ordinarily furnished with these equipments consume 2½ watts instead of 4 or 5 watts per candle-power consumed by the lights used by other systems.

The operation of the Consolidated "Axle Light" system is as follows: As a train accelerates, the generator, which is installed upon the truck and belted to an axle pulley, builds up its voltage until at a certain speed known as the "critical" speed (usually between 12 and 15 miles per hour), its voltage is equal to that of the battery, with which up to this time it has not been connected. An automatic switch now closes and connects the generator in multiple with the battery and lamps.

A further increase in train speed above this point will gradually put a load upon the machine, and it will generate more and more current, which will go either to the battery or lamps.

There is interposed between the generator and the battery and lamps a solenoid and plunger arrangement through which the generator current must flow. This is the actuating mechanism of the automatic regulator. As the generator current gets stronger and stronger, the solenoid exerts more and more pull upon its plunger until it is sufficient to overcome the resistance of the opposing spring. The machine current is now at its normal value.

Any further increase of speed will cause the spring to be overbalanced and throw into gear the ratchet mechanism of the generator field rhe-

ostat operated by the small electric motor, and immediately restore equilibrium. As the speed of the train reduces, these operations take place in a reverse order until when the critical speed has been passed the automatic switch opens and disconnects the generator. The lamps are then fed from the battery alone.

In all electric systems where a battery is used in multiple with the generator and lamps the voltage at its terminals is necessarily greater when charging than while discharging. To provide for this, the regulator is so arranged that the moment the voltage of the battery begins to rise, due to charging current flowing, there is automatically inserted in the lamp circuit a series resistance to compensate for the increase in voltage. It is impossible so to adjust the apparatus that the variation in voltage at the lamps themselves is entirely negligible and can only be detected by means of a delicate voltmeter.

In regard to charging batteries it can easily be determined what average number of ampere-hours is required each day for the lighting service. All that is necessary, therefore, is to put into the system a certain percentage in excess of what is taken out each 24 hours in order to take account of the various losses that occur in the transformation of energy.

THE DE LAVAL.—Under this system a shunt wound dynamo, driven by a steam turbine, is located on the locomotive; both are riveted to a common bed plate in such a manner that the sight of the engineer is not impeded in any way. A dy-

namo capable of generating 180 amperes is used. The propelling shaft of the turbine is coupled with the dynamo. The turbine revolves 20,000 times per minute, the dynamo 2,000 times; the steam is introduced through three nozzles. A governor operates on the steam valve and controls the speed under varying loads. The heat of the boiler is ventilated away from the turbine and dynamo by both being seated on a bed plate isolated from the boiler by small blocks. The whole is enclosed in a dust proof casing. The two main conductors start from the binding posts of the dynamo and are carried throughout the whole train from car to car by means of plug connections. In each car a battery is switched in parallel with the mains to the dynamo. The circuit feeding the lamps is also connected to the same mains. Before every lamp a special resistance is switched in through the influence of which the lamp current is held constant.

When the engine is coupled to the train the whole system of lines is united and the batteries being kept charged the current circulates when they are switched in. When the switch is opened the engineer sets the dynamo in motion so as to generate a current which nearly equals the tension in the line. The engineer has nothing further to do when he comes on a train but to inform himself of the tension of the batteries, then to cut the dynamo in and to keep the voltage at 68 volts. When the engine is to be uncoupled the engineer throws the main switch open and shuts down the dynamo.

The turbine and generator may be placed in the baggage car and supplied with steam through a reducing valve and hose from the locomotive if desired, or two units of equal size may be placed in the baggage car, each of which should be a little over half the capacity required for lighting the train. With such an outfit there is little necessity for storage battery as it is an easy matter to have a transfer switch for lighting the train at each division end where the locomotive is changed and as it is unlikely that anything would happen to both units at the same time the risk of having an unlighted train is minimized.

The following questions and answers, together with the drawings shown will be of practical benefit to the student:

METHODS OF CAR LIGHTING.

Q. What methods are employed in lighting passenger cars?
A. Oil lamps, Pintsch gas, carbureted air, acetylene gas or electricity.

PINTSCH GAS SYSTEM.

Q. What is Pintsch gas?
A. A dry, fixed gas, manufactured from crude petroleum. It contains a high percentage of carbon.
Q. How is Pintsch gas generated?
A. By vaporizing crude oil at a very high temperature.
Q. How is this done?
A. By means of retorts, in one of which the oil is first vaporized, and after passing into another retort becomes a fixed gas. It then goes through the process of being washed and condensed, and then it is measured into a storage tank of the ordinary balloon type, similar to those in use for city gas. From this storage tank it is drawn and compressed into storeholders, from which it goes into the mains and filling lines.
Q. Briefly stated, what is the general description of the Pintsch system?

A. The lamps are supplied with gas from storage tanks or holders (sometimes called receivers) carried underneath the car. The gas is stored in these tanks at a pressure of about 150 pounds to the square inch. On its way to the lamps the gas passes through a regulator that automatically reduces its pressure to the proper pressure for operating the lamps, regardless of the quantity of gas in the tank or of the actual pressure therein. The supply or quantity of gas which should be carried on a car varies according to the service the car performs. Usually sufficient gas for from two to four nights' lighting is carried.

Q. How is the gas conveyed from the storage tanks at the works to the cars?

A. From the storage tanks the gas is piped to railway depots, and from these terminals it is supplied to the cylindrical tanks attached under the cars. There are regular supply stations, where the gas is stored, usually at terminal or division points.

Q. What is the general arrangement of the necessary appliances on a car for using the gas?

A. The appliances and their general arrangement is shown in Fig. 1. They consist of H, the cylindrical tank or gas holder in which the gas is stored under pressure. From this tank the gas passes through pipe P″ to the pressure regulator R, thence through pipes *pp* to the piping on the roof of the car connecting with the various lamps. There are two filling valves V, one on each side of the car (for convenience in charging or filling). B is the filling valve bracket. The pipes P and P′ lead from the filling valves to the tank or holder. Where the tank is to be filled a *hose* is connected with the piping from the storage tank to one of the filling valves V. When the gas is being admitted through the valve on the far side of the car (as shown in Fig. 1), it passes through pipe P′, then through pipe P″, into the cylindrical tank. From the tank it afterwards flows through pipe P″ to the regulator R. Pressure gauge G piped to the tee flange union *u*, serves *first*, to indicate the pressure in the tank H and the pipes P, P′ and P″. These pipes are known as the high pressure pipes; and *second*, to indicate the quantity of gas consumed in a given period. The main cock C is located about five feet above the car floor, and is boxed in to prevent being tampered with; by this cock the trainmen control the flow of gas to the lamps.

A ventilator N is fixed on the roof of the car over each center lamp.

Q. What is the capacity of the cylindrical tanks or gas holders attached to cars?

A. The capacity varies according to the size of the holders, and the size of the holders for a car is determined by the service in which a car is engaged; sometimes cars have two or three holders. The size of holders and their capacities are as follows:

CAPACITY OF HOLDERS.

SIZE OF HOLDER.		*Capacity in Cu. Ft. at* 10 *Atmospheres (about* 147 *lbs. per square inch.)*
Length.	*Diameter.*	
9′ 6″	20½″	211.8
8′ 6″	20½″	188.0
7′10″	20½″	175.0
6′ 1″	20½″	135.0
6′ 1″	18½″	110.0
6′ 1″	16½″	85.5

Q. How is the gauge graduated?

A. In *atmospheres* instead of pounds, although sometimes gauges are attached that show both atmospheres and pounds.

Q. What is an atmosphere?

A. In general terms, an atmosphere equals filteen pounds pressure to the square inch, but actually, by Pintsch gauges, it is 14.7 pounds per square inch above the outside air. The gauge, connected with the holder into which its own cubical contents has been forced, will indicate one atmosphere increase in pressure. If twice its cubical contents has been forced in, then the gauge will show two atmospheres increase in pressure. If ten times, then ten atmospheres.

The standard pressure to which cylindrical tanks are filled is 10 atmospheres, or 150 pounds. Each atmosphere of pressure indicated, multiplied by the cubical volume of the holder or holders, gives the available gas supply. Example: A car with two holders, each of 18.8 cu. ft. of volume, and filled to 8 atmospheres, has on hand as available gas, $2\times18.8\times8=300.8$ cubic feet. When filled to 10 atmospheres, these holders would contain 376 cubic feet, and would supply five center mantle lamps, two vestibule lamps and two bracket lamps, consuming altogether 14 cubic feet per hour for about 27 hours full burning.

Q. How is constant, steady pressure of gas maintained?

A. The gas is conducted through the reducing valve or regulator "R," in which the pressure is so reduced and governed as to maintain a constant pressure on the outlet pipe "p" suitable for use in the lamp, regardless of what the pressure in the tank may be.

Q. Does the regulator govern the supply of gas to the lamps in the car?

A. Yes; it controls the gas pressure in a perfectly uniform and automatic manner, whether the pressure in the tank be two or two hundred pounds.

Q. How is the gas conveyed to the different lamps in a car?

A. From the regulator it passes into pipe *pp* to the pipe which runs lengthwise on the car roof (Fig. 1), and through the branches to an arm of each lamp, known as the gas-way arm, through which it passes to the burner.

Q. How is the gas turned on or off?

Fig. 2

SECTIONAL VIEW

(235)

A. By means of the cock on the gas-arm of each lamp.

Q. What is the average consumption of gas per lamp?

	Per Burner.
A. Large single mantle lamps. .....2.	cu. ft. per hr.
Small mantle lamps and mantle brackets..0. 8	cu. ft. per hr.
Mantle vestibule lamps with small mantle..0. 8	cu. ft. per hr.
Mantle vestibule lamps with large mantle..2.	cu. ft. per hr.
Per Lamp.	
Lamps with four flat flames... .....3.	cu. ft. per hr.
Vestibule lamps with two flat flames.....1.	cu. ft. per hr.
Bracket lamps with one flat flame.....0.75	cu. ft. per hr.

Fig. 4

Q. Is there more than one type of tank valve?

A. Yes; there are two, known commonly as the "old style" and the "new style." The "old style" is shown in Fig. 2 and the "new style" in Fig. 3.

Q. In what particular does the "old" differ from the "new" style?

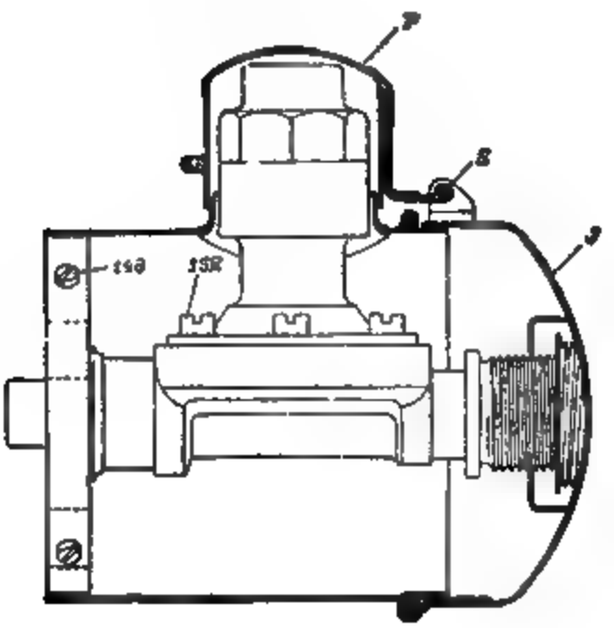

Filling Valve and Cover

F

A. The new style differs from the old in that the flanges F, F on the gland G are dispensed with, the gland being made hexagonal at H, and tightened up by means of a wrench, instead of bolts, as with the old style.

Q. How is the valve shown in Figs. 2 and 3 (indicated at V in Figs. 2 and 3) opened or closed to control the flow of gas into or out of the holder?

A. To open or close this valve the cap C is removed with the Key K, and the valve turned by the other key *k*. The various

joints are made tight by the gaskets *g*, *g*, the passage leading to the filling valve is indicated by the dotted circle behind the valve *v*. The pipe connection is made by the union *u*, shown in the elevation of Figs. 2 and 3, and as shown in Fig. 1, wherein one of these connections is indicated at each side of the valve.

Q. When is this valve used?

A. Only in case of emergency, or when repairs to piping are to be made.

Q. What are the details of the filling valve and how is the gas admitted through it?

A. There are two types of this valve, shown in Figs. 4 and 5. In the old style valve the gas is admitted through a hose connection made at A; it passes along the passage and up through *b*, and when the valve *f* is off its seat (as indicated in Fig. 4) passes down *c*, along passage *d* and into the pipe leading to the holder. Valve *f* is raised or lowered by turning stem *s*. When open to admit gas, the valve is raised against its packing ring *m*, making the joint gas tight. The valve carrier *g* moves up and down as the stem revolves, but it is prevented from turning by screw *h*, the end of which engages in a slot cut in *g*. The bonnet *e* is bolted to the body of the filling valve by the screw *i*. Cover D encloses the whole, E is the key cap and F the cover cap.

The new style or improved filling valve differs from the old style in the details of the bonnet and valve. The valve carrier L (Fig. 5) is raised or lowered by turning stem K, L being prevented from turning by its lower portion being square where it passes through the bonnet N. A metallic packing Q is provided, preventing leakage around the valve carrier L. Packing nut R holds the packing in position. The valve stem K is held between the packing nut R and valve stem nut M. Set screw B prevents the nut M from turning. In order to tighten the packing turn nut R. Valve carrier L can be removed and a new one substituted by removing packing nut R.

The bodies of the new and old style valves are practically identical. The new style bonnet can be applied directly to old style valve, the only change necessary being the replacing of the old bonnet cap E of the cover No. 89 with the new style cap P.

Q. What are the styles of lamps and their general details, and how does the gas reach the burners?

A. There are two general types of lamps used with Pintsch gas, the flat flame regenerative and the inverted mantle lamp. Of the first class there are two general types, shown in Figs. 6 and 7. In the first type shown in section in Fig. 6 the gas passes from the pipe along the car roof down one of the arms of the lamps (see E, Fig. 1) into ring C at *a*, then up through tube *b*, and down pillar *c*, to the cluster 1, 1, and burners *e*. The white porcelain cup reflector *gg* is bolted to the pillar *c* by screws *f*, asbestos rings being above and below the opening in the reflector; *hh* is the white enameled ring reflector, *ii* is a mica chimney through which pass the hot

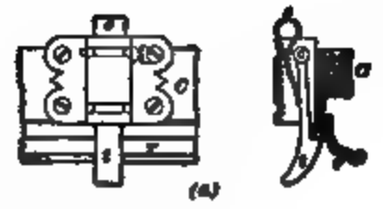

Fi

'S

MICA

. RII

HE

air and gases to flues *j*, *j*. The spider DD, with ring C, form the framework of the lamp. Two views of the spring catch are shown at (a), which lock the bowl A to the iron ring C; *t* is the catch, *s* is its spring, C is part of the iron ring, and *r* is the bezel or ring for the bowl.

Q. What are the special features and the action of this lamp?

A. The special features are the closed globe A, the white porcelain reflectors *g* and *h* and the peculiar way in which the air

supply to the flame is maintained. The center lamps are so arranged that the incoming air is heated considerably before it reaches the flame, resulting in steadiness and increased whiteness of light. As shown in Fig. 6, air comes through openings in chimney I, passes down and comes in contact with the side of flue *j*, thus becoming heated. Then it passes into the space between the

dome B and the mica chimney *i*, becoming still further heated; there diaphragm P deflects it toward chimney *i*, thus it becomes well heated. From the space between *i* and *h* it passes out of the holes in the outer edge of *h* into bowl A. This tortuous course serves to protect the flame from any drafts the lamp may encounter. The gases of combustion thrown off by the flames pass through the space between *g* and *i* through flue *j* and out of the crown.

The second type of flat flame lamp is shown in section in Fig. 7. In this lamp the gas passes from the roof line down through the gas arm to the body casting No. 580, through the casting No. 580, extension pillar No. 538, cluster stem No. 305, to cluster No. 575 and burners No. 222-A. The air for combustion enters at the upper row of small holes in casting No. 580 and becomes heated by contact with the hot flues No. 592, which carry off the products of combustion. This heated air emerges through the lower row of holes in casting No. 580 and falls to the burner, keeping close to dome No. 1668 and bowl No. 596, passing inside of ring reflector No. 1686. The products of combustion pass up between cup reflector No. 537 and cylindrical reflector No. 577, and are discharged through flues No. 592 and chimney No. 586 to the ventilating bell. This lamp possesses the same features, as to preheating of air and protection of flame from drafts, as the lamp previously described. It has the added advantage of a spherical contour, which lends itself to artistic design and, when lighted, presents the appearance of an illuminated sphere. The regulator used with the flat flame lamp is No. 244, giving an outlet pressure of 1.15 ounces.

CARE OF LAMPS.

Q. How should the burners in flat flame lamps be adjusted?

A. They should be turned so that the flame is square and in the right position, which is done by having the two small holes in the tip come in line with the cluster arms, *l*, *l*, Fig. 6.

Q. How is the cluster arm secured in its proper position on the cluster stem?

A. By means of the lock nut *w*.

Q. How would the adjustment be made in order to get the flame in the right position?

A. The adjustment should be made by the screws (x), Fig. 6, at the base of the burner tip, until, with all the other fixtures of the car lighted and gas turned full on the burner it is just upon the point of "blowing"; then the check screw should be secured by means of the locknut *y* (Fig. 6).

Q. What distance below the ring reflector *h* should the tops of the tips be?

A. About 19/16" for round tips and 1 11/16" for hexagonal tips, as shown in Fig. 6.

Q. Is it important to keep the pipes free from dirt?

A. Yes; it is very important, because the jarring of the car is apt to dislodge dirt and scale from the inside of the pipes and the flow of gas carrying it along, the gas-ways in the lamps thus become clogged and the light seriously impaired.

Q. How should the inside of pipes be kept clean?

A. By frequent blowing out and at such times by jarring them to loosen scale and dirt.

Q. How should this blowing out be done?

A. To do this open the main cock, all lamp cocks, and remove tips or burners from the lamps. Shut off tank valves and disconnect ½ in. pipe from outlet of regulator. Connect an air hose with the ½ in. gas pipe and blow through the pipes and lamps. If air is not available the outlet of the regulator can be stopped and the ½ in. pipe disconnected from the regulator, connected by means of a hose to one of the filling valves of the car, and by opening the valve allow the gas from the holder under the car to blow through the pipes and lamps for a few seconds. *The windows and doors must be opened during this process. No pressure should ever be put on the outlet of the regulator.*

Q. If the flame is wavy and unsteady what does it denote and what should be done?

A. It denotes that air is getting into the lamp improperly, the most likely cause being either a broken mica chimney or the joint between the bowl and ring not air-tight. If the defect cannot be remedied by the trainmen it should be reported to the car inspector or other official at the first division terminal.

Q. What should be done if the arms or the stem of the cluster becomes partially choked?

A. It is sometimes possible to clear out an arm by running a wire through it, first taking out check screw *x*. If that proves ineffectual the cluster may be unscrewed from the stem and the passage in the latter cleared out in the same manner, but sometimes it is necessary to use the twist drills furnished for the purpose, which are arranged to fit into a screw driver handle.

Q. If the flame is badly shaped and smoky, what does it denote and how may it be remedied?

A. It denotes dirt lodged in the burner tip. It may be remedied, temporarily only, by tapping the cluster. It should be reported so that the cluster may be taken off and the dirt all removed, as a considerable amount may have been carried along by the gas from the inside of the pipes.

Q. How should a suspected leak be located?

A. Never by the use of a light. The sense of smell will usually serve to locate it, but if it does not soap suds should be applied to the suspected pipes and fitting and leaks will be easily discernible by the bubbles they make.

Q. Are flat flame lamps now being applied to new equipment?

A. Both of these types of flat flame lamps have been superseded by the inverted mantle lamp.

Q. Why was the mantle introduced?

A. By the use of mantles the illumination from a given amount of gas is increased more than four-fold and the mantle lamp gives greater flexibility of design. With the latest type of mantle the old four flame lamps can be either replaced with mantle lamps or remodeled to use a mantle, and the illumination increased three-fold with a gas consumption of two-thirds that of the flat flame lamps. This not only cuts down the actual cost of lighting, but gives an increased storage capacity to the equipment already on the car.

Q. What special provision is made to have the mantles withstand vibration and handling?

A. The mantles for these lamps are especially made to withstand the rigor of railroad service and are boxed in such a way that the mantle can be applied to the lamp without any part of the mantle itself being touched by the person applying it. Protectors are also fitted to the mantles to prevent breakage when lighting the lamps or cleaning the glassware.

Q. Is there more than one size of mantle and type of lamp?

A. There are two types of mantle lamps in service, those using small mantles of about 30 candle power each and those using a large mantle of 100 candle power.

Q. How is the light produced in the first type?

A. The first type of lamp is shown in section in Fig. 8. The gas passes down each of the four arms from the roof line through the casting No. 2783 and short arm to extension pillar No. 2749, then through gas strainer No. 2748 to the gas tip No. 2715. This tip is provided with a small orifice, which delivers the proper amount of gas for the burner. The velocity of the gas draws in air through the transverse passage in the body No. 2747, and this air mixes with the gas and issues from the burner nozzle No. 2706, where it burns with a blue smokeless flame, which heats the mantle No. 2640 to incandescence. The air for combustion enters at the bottom of the opal bowl No. 2603-A, and the products of combustion pass out through holes in the conical portion of mantle and globe holder No. 2621, and holes in top of ornamental crowns. The mantle and globe are both held by the mantle and globe holder No. 2621. This holder is made of nickeled steel and has a rolled thread for receiving the thread on the globe ring No. 2752 of the globe No. 2603-A. It also has a rolled thread at the end of the conical portion, the outside of which takes the asbestos holder of mantle No. 2640 and the inside of which fits a thread on burner nozzle No. 2706.

Q. How is the mantle and globe applied?

A. To apply the bulb (mantle, glass and holder complete) to the lamp, the No. 2621 is screwed on to the nozzle No. 2706 until

the top of the No. 2621 seats against the bottom of the body No. 2747. It is held in position by the spring lock No. 2750.

Q. What regulator is used with this style of lamp?

A. The regulator for use with lamps of this type is No. 1954, arranged to give an outlet pressure of one pound per square inch.

Q. Why was the large mantle introduced?

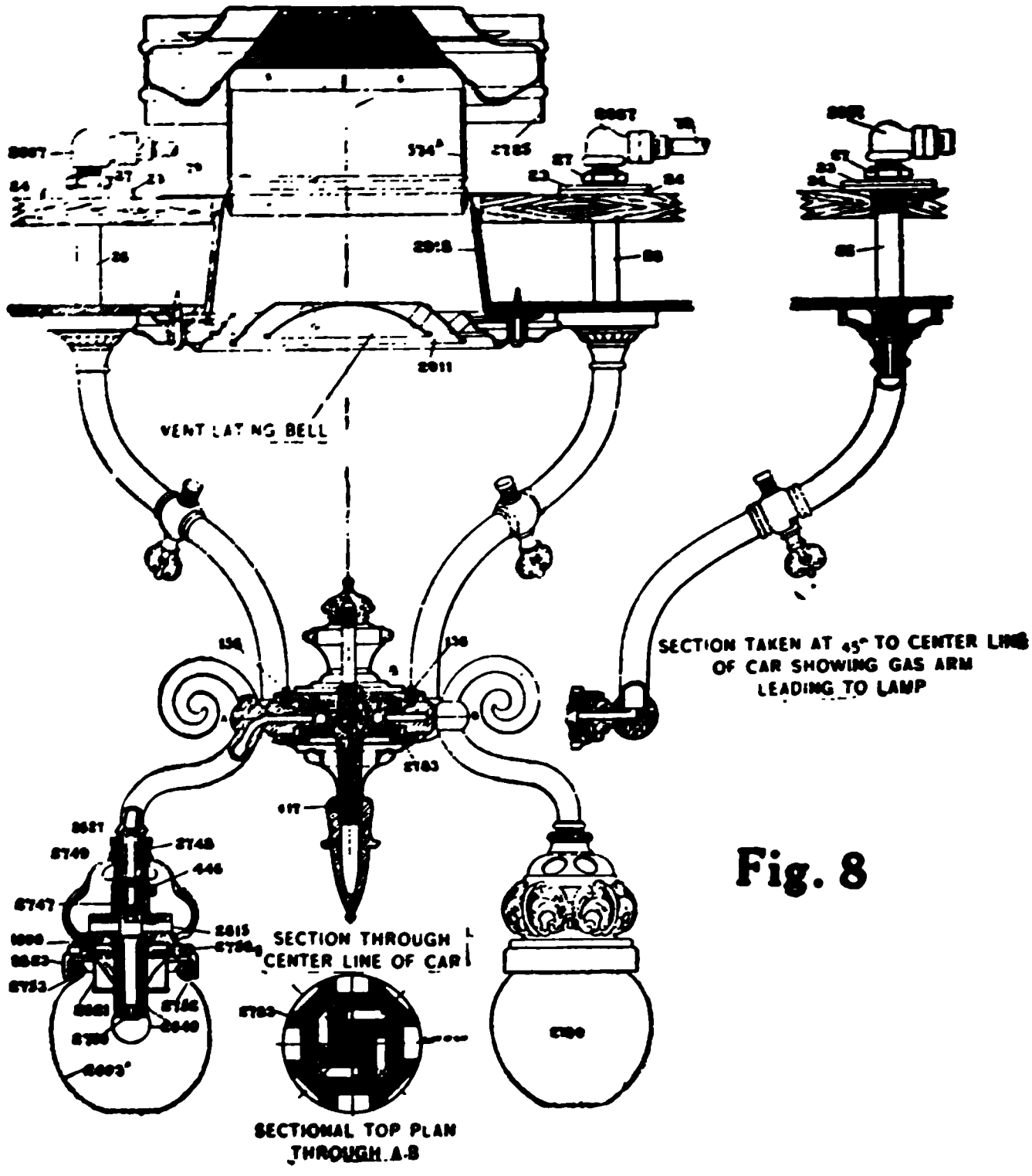

Fig. 8

A. It was found that by the use of a mantle giving about 100 candle power a considerable economy in gas consumption and maintenance could be obtained.

Q. Explain the construction of lamp with large mantle.

A. Fig. 9 shows the section of a lamp which is typical of this class. The gas is carried by the gas arm through body casting No.

3085 and strainer No. 2748 to gas tip No. 3046. The gas issuing from this tip mixes with air drawn in through the ports in casting No. 3052 and the mixture issues from burner nozzle No. 3049, where it burns, making mantle No. 3044 incandescent. Air for combustion also enters at the bottom of bowl No. 3116, and the products of combustion pass off through flues No. 3087 and No. 3091.

Q. How is the mantle applied to this lamp?

A. In this lamp the mantle is applied directly to the burner nozzle, using the box as shown in Fig. 10.

Q. What regulator is used with this lamp?

A. The regulator used with these lamps is No. 254, which gives an outlet pressure of two pounds per square inch.

Q. How should the lamps be lighted when inverted mantle burners are used?

A. The main cock should first be opened full, the lamp cock should then be opened and the flame of a match or a taper held under the opening of each small globe, the flame only being allowed inside the globe.

Q. How should the lights be extinguished when inverted mantle burners are used?

A. The gas should be turned off at each gas cock.

Q. If the light is poor, what does it denote?

A. That a mantle has become defective or that the burner or tip is stopped.

Q. What should be done to remedy this?

A. The light should be extinguished, and when sufficiently cool the glass bulb and its holder removed, care being taken to see that the holder unscrews with the bulb, then a new bulb should be substituted. All the flames should then be lighted, when if any be found defective the trouble will probably be found to be an obstruction in the gas supply, in which case it should be reported to the proper official upon arrival at terminal. If the flames are of the proper size, see that all mantles are applied to burners properly.

Q. What sort of flame is produced in mantle lamps when the mantle is removed?

A. A long conical light blue flame, with a base composed of seven cones of deeper blue (see Figs. 11 and 12).

Q. If this flame is not given by the burner, what does it show?

A. Either that the gas tip should be cleaned or that the regulator pressure is too low.

Q. What indicates a low pressure from the regulator?

A. A small flame at all the burners.

Q. What should be done in this case?

A. The regulator should be removed and a new one applied.

Q. If a gas tip is stopped, what should be done?

A. If in a lamp using large mantles take out burner nozzle No. 3049 (see Fig. 9) and remove the tip and gas strainer No. 2748 by the use of socket wrench No. 3061. If a socket wrench is not available the tip becomes accessible by unscrewing body No. 3052. Remove gas strainer No. 2748 from tip No. 3046, see that it is free and clear, and, if necessary, clean the orifice in the tip No. 3046 by means of needle No. 2100. *Do not use a wire or pin for this work, as the orifice will be enlarged and the lamps will not give the proper light.* A yellow or smoky flame shows either that the air passages through the body No. 3052 are stopped (this is not likely to occur), or that the tip No. 3046 is defective. In the latter case a new tip should be applied.

If the stoppage occurs with a lamp using small mantles and gas tip No. 2615, take out burner nozzle No. 2706 (see Fig. 8) and remove gas tip by the use of socket wrench No. 2880. If

Fig. 10

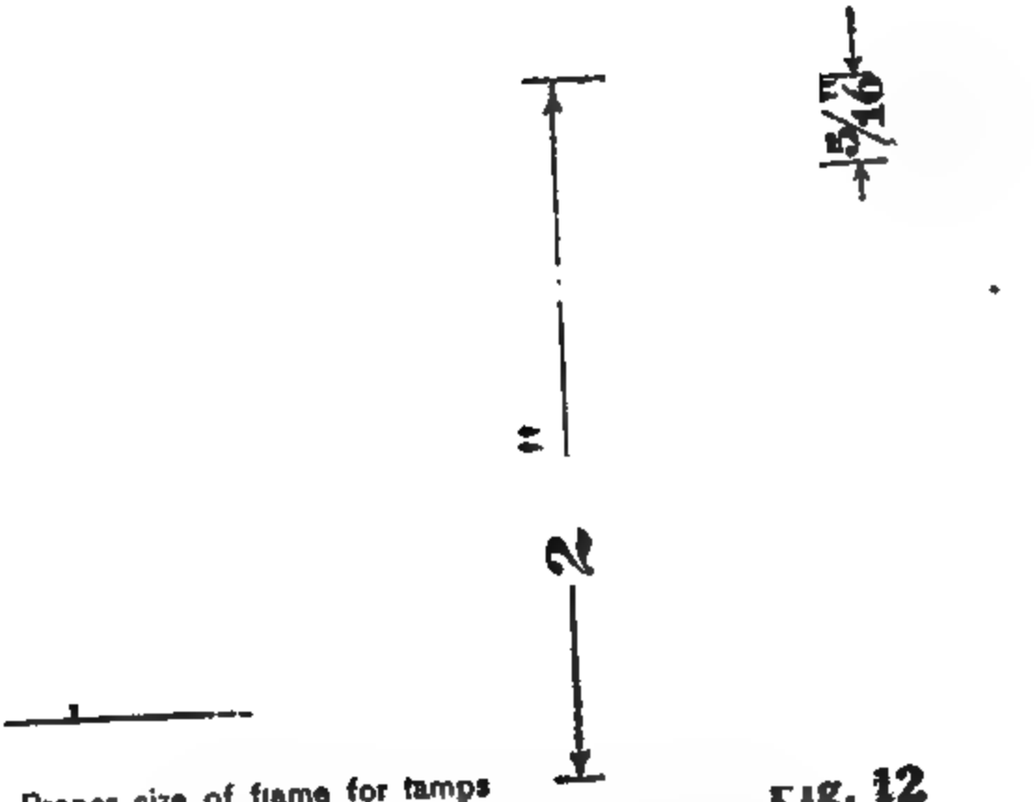

Proper size of flame for lamps using large mantle

Fig. 11

Fig. 12

Proper size of flame for lamps using small mantle

socket wrench is not available, remove body No. 2747 by unscrewing it from extension pillar No. 2749, when tip may be removed with an ordinary wrench. The gas strainer can only be reached by removing extension pillar No. 2749 from the gas-way. To get at gas tip of lamp No. 2501 (see Fig. 13) remove body No. 2703 and air mixer No. 2713. This can only be done by unscrewing shield No. 2694 a sufficient distance to loosen the lock washer No. 2704, when the air mixer can be unscrewed from the gas arm. Tip can then be removed with an ordinary wrench. The screen in gas arm back of the gas tip can then be removed, cleaned and replaced.

Q. How should new mantles be applied?

A. When applying a new mantle do not remove it from the box, but remove the top of the box and then screw mantle on burner

nozzle by means of the box, as shown in Fig. 10. When the mantle is screwed up as far as it will go remove the box by a straight downward pull. Burn off the covering of mantle, then turn on gas and light.

INSPECTORS' AND FOREMEN'S DUTIES.

Q. What duties in regard to the Pintsch gas equipment should a foreman or inspector perform when a car equipped with Pintsch gas arrives at a terminal?

A. He should thoroughly clean and carefully examine the lamps, and if any parts are found defective make necessary repairs.

Q. What should he do after having tested for and remedied all defects?

A. He should close the cock at each lamp separately, then close the main cock C, using the key furnished for that purpose.

Q. Should a leak be found at the brass flanges soldered on the ¼" extra heavy small iron pipes under the car which connect the tank, regulator and filling valves, what should he do?

A. A small lead washer is placed between the faces of the flanges to make a tight joint, slot headed bolts being used to draw the flanges together; a leak may, therefore, be stopped by tightening the slot-headed bolts with a screw driver.

Q. If tightening the slot-headed bolts does not stop the leak, what should he do?

A. Remove the old washer and substitute a new one.

Q. Suppose it should become necessary to disconnect these pipes in order to resolder or replace a washer, what should he do?

A. He should shut off the gas at the tank valves by removing the cap from the tank valves, which would then expose the stem of the tank valve to view. The stem should then be turned to the right until the valves are closed. A brass key is provided with which to turn this stem. The valve caps should then be replaced, the gas turned on at the tank valves, and all joints made tight.

Q. How should the equipment be tested?

A. All the fixtures should be shut off at their cocks, and the holder valves should also be closed ready for testing. This is done by removing cap C (Figs. 2 and 3) and closing valve v, using the keys K and k, as shown in Fig. 2, and then cap C should be fastened again tightly. Then a *hose* should be connected at A, Fig. 4, and by means of a force pump, or otherwise, a pressure of about 15 atmospheres (220 pounds per square inch) should be put on. Then the filling valve should be closed, and if at the end of an hour the gauge shows no decrease in pressure, the equipment may be passed. When the test has been finished and the pressure released, the valves on the gas holders should be again opened.

Q. What is the difference between low pressure and high pressure piping?

A. The gas under low pressure is carried from the outlet of the regulator up to the roof by the piping pp shown in Fig. 1. The joints in low pressure piping are usually made tight by lead paint instead of by soldering, as in the case of high pressure piping.

Q. How should the charging be done?

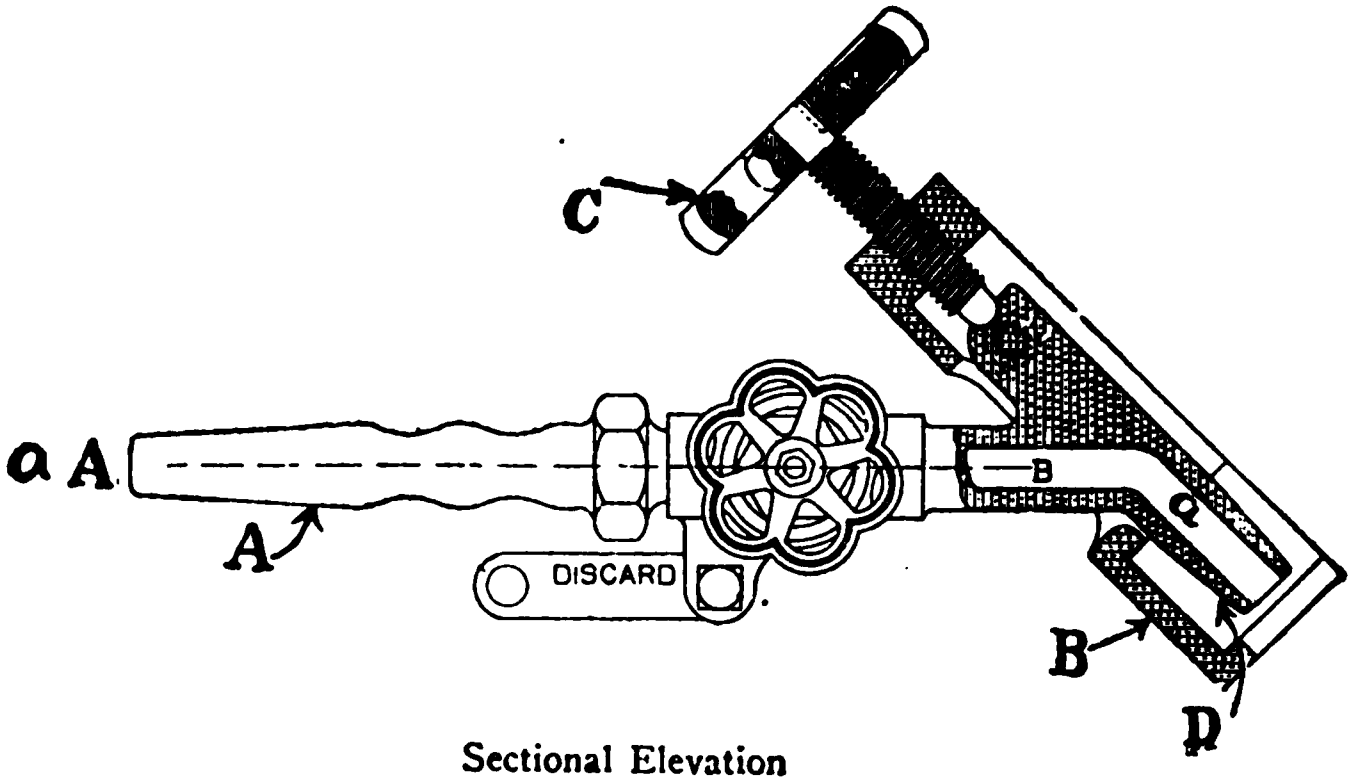

Sectional Elevation

Fig. 14

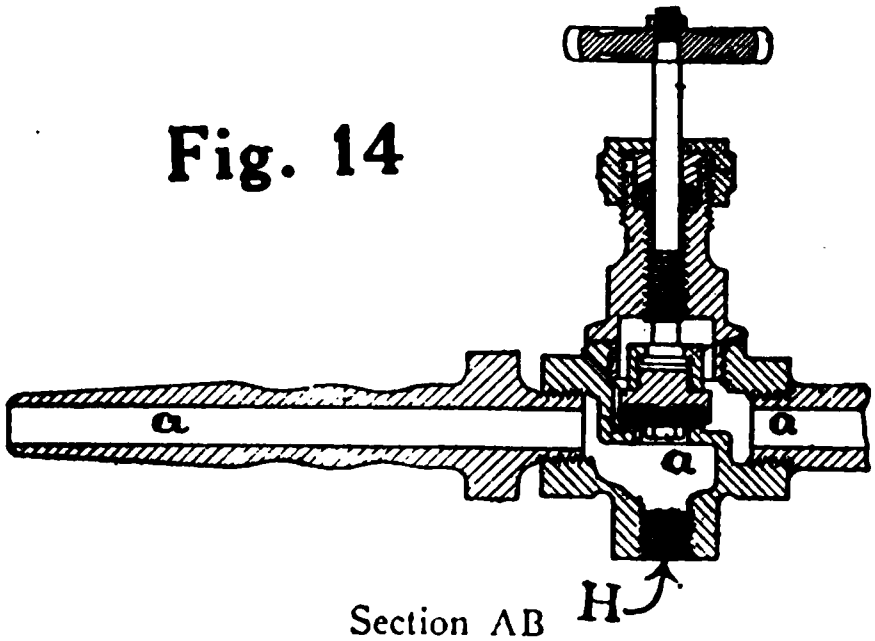

Section AB

A. The filling valve should be connected to the *hose* leading from the charging line of piping. This is done by means of a special *hose* fitting shown in Fig. 14. The charging hose is permanently connected to nipple A. The hose fitting is brought up against the filling valve so that clamp B fits over the end of the valve and engages with flange n (see Fig. 4). The hand wheel C is then screwed up, forcing nozzle D into the end A of the valve

(Fig. 4), making practically a tight joint, which is made more possible by a small paper washer or ferrule being slipped over the end of the nozzle before inserting the latter in A. Then when the pipe line valve is opened gas flows through *a a a* into the filling valve.

Q. How is the connection for the pressure gauge made?

A. At the piece H.

Q. If a filling valve leaks, what should be done?

A. First see if valve is closed by turning valve stem to left, as this is a left hand valve. If leaks still continue it is probably around packing nut R (Fig. 5) and same should be tightened.

Q. Should a filling valve leak too badly to admit of repairs, what should be done?

A. The fact should be at once reported to the proper official.

Q. What precautions should be taken before turning on the gas at the main cock?

A. The burners of every lamp in the car should be turned off.

Q. Should a leak be discovered in any part of a car, what should be done?

A. The gas should be immediately shut off at the main cock.

CARBURETED AIR SYSTEM.

Q. What is the carbureted air system of lighting cars?

A. A system of using compressed air and gasolene for illumination.

Q. Where is the compressed air obtained for the purpose?

A. Directly from the train pipe of the air brake into a storage tank fastened beneath the car.

Q. How does it flow?

A. Through a pressure reducer and a regulator to the carbureters on the roof of the car.

Q. What is a carbureter and how is it constructed?

A. It is a vessel made of cold rolled copper, of about 1/16 inch in thickness. A compact mass (usually about 12 pounds) of wicking is placed inside two copper shells. This wicking absorbs about four gallons of gasolene at a time. There is an outer casing of double thickness Kalamein iron packed between with strawboard, which serves to protect the carbureter from injury and from the rays of the sun, and it also furnishes a chamber in which hot air from the roof of the car may circulate around the carbureter and keep it warm.

Q. How are carbureters located on the roof of a car?

A. One over each lamp. The compressed air passing through to the lamps beneath is sufficiently enriched by the gasolene to give out a brilliant light.

Q. How long will a lamp burn?

A. Sufficient gasolene in a carbureter may be supplied to burn for forty hours.

Q. Is this system of lighting much used?
A. No.
Q. Why?
A. Because of the danger attending the use of volatile oils and the difficulty of regulating the quality of the gas.

THE SAFETY STORAGE SYSTEM OF ACETYLENE GAS.

Q. What is the chief characteristic of the safety storage system of acetylene gas?
A. An immense storage capacity in a remarkably small space.
Q. How is this accomplished?
A. By means of a specially constructed tank, and the use of acetone as an absorbent.
Q. How is the tank constructed?
A. It is packed from end to end with silicated asbestos discs. The second head is then securely riveted or brazed in place, as shown in Fig. 15.

Fig. 15

Q. What is acetone?
A. A species of wood alcohol which possesses the property of absorbing twenty-five times its own volume of acetylene gas at 60° F.
Q. How is it employed in this system?
A. After the cylinder is packed with asbestos discs it is charged to the extent of 40 per cent. of its empty volume with acetone, the latter being absorbed by the asbestos discs.
Q. Why does this give a large storage capacity?
A. Because when a tank is so prepared it absorbs twenty-five times the volume of acetone put in it in gas per atmosphere, or at ten atmospheres pressure (150 pounds) it absorbs 250 times the volume of acetone put in the tank. In other words, a tank charged with eight cubic feet of acetone will absorb $8 \times 10 \times 25 = 2{,}000$ cubic feet of gas, when compressed to ten atmospheres pressure.
Q. What is the size of tank applied to railway cars using this system?
A. For standard coach lighting and branch line service a cylinder 20″x114″, or one 20″x62″, are used. For motor cars, where there is little available space, a cylinder 16″x48″ is found to be the most convenient.

Q. At a charging pressure of ten atmospheres (150 pounds), how many cubic feet of gas will these tanks hold?

A. The large tank 2,000 cubic feet, the smaller one 1,000 cubic feet and the one for motor cars 500 cubic feet.

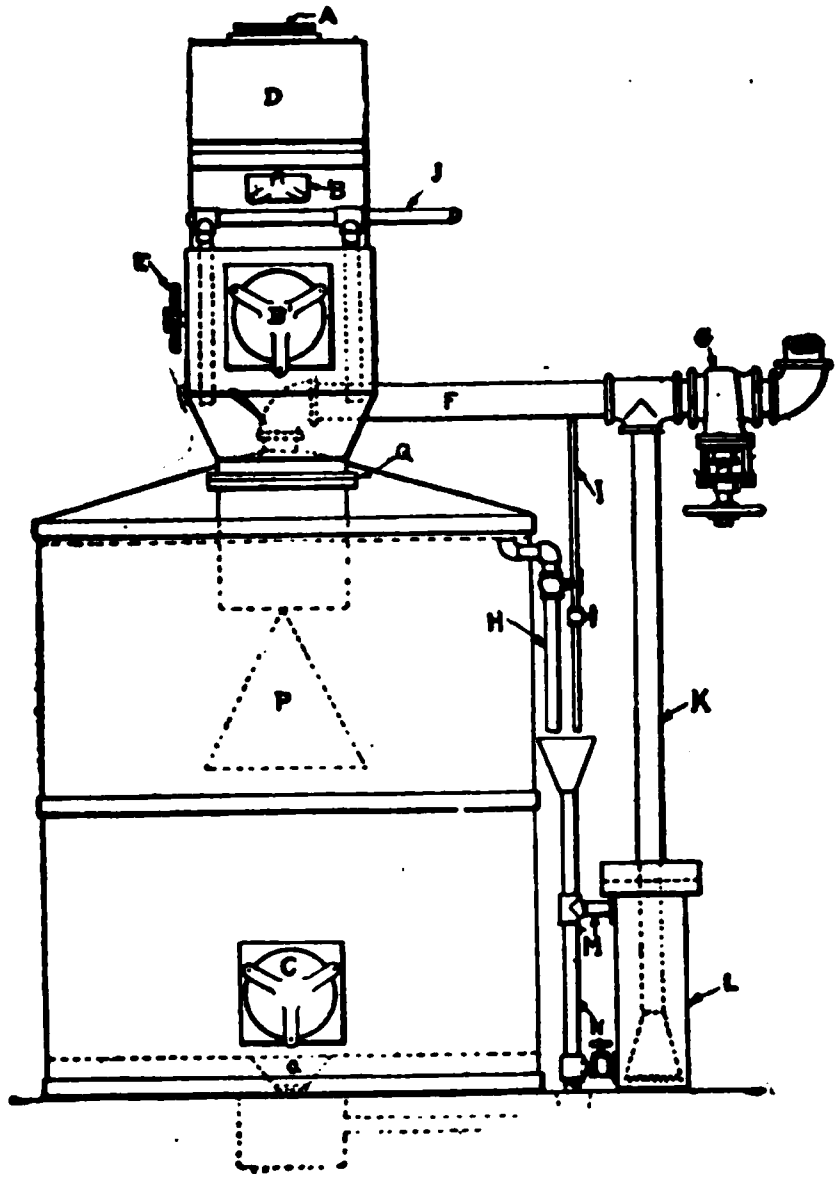

GENERAL ACETYLENE GENERATOR.

Fig. 16

NAMES OF PARTS.

A—Hand-Hole through which Hopper is filled with Carbide.
B—Hand-Hole for Cleaning Feed Drum.
C—Hand-Hole Giving Access to Generating Chamber.
D—Carbide Hopper.
E—Ratchet Wheel Operating Feed Drum.
F—Gas Main from Generator.
G—Gate Valve.
H—Over-Flow Pipe.
I—Vent Pipe.
J—Water Supply Pipe.
K—Blow-Off Pipe.
L—Blow-Off Seal.
M—Blow-Off Seal Overflow.
N—Drain Pipe.
O—Drain Valve.
P—Carbide Deflector.
Q—Flange Joint Connecting Hopper with Generating Chamber.

Q. What candle power will one cubic foot of this gas yield?
A. Fifty candle power per foot.

Q. For how long would a tank full of this gas furnish light?
A. A 2,000 cubic foot tank, or an equivalent of 100,000 candle power, should furnish the average railway car with light for a period of fifty days without recharging.

Q. Where is the gas generated and pumped into these tanks?
A. At specially constructed generating and charging plants, the machinery for which is as follows: Generator, cushion holder, purifying boxes, driers, three-stage water cooled compressor operated by electricity, gasolene or steam power, separators and storage batteries. Thence by buried pipe line to railroad yard. (A sectional view of a generator is shown in Fig. 16.)

Q. How is the gas set free from the acetone after having been absorbed?
A. Acetone gives up the gas absorbed in it immediately upon release of pressure, therefore the discharge of gas from one of these cylinders is in all respects the same as the discharge of air or any gas from an orifice in a tank under pressure. This liberation of gas continues uniformly until no pressure exists on the tank.

Q. What are the proper names of the various parts of the necessary equipment and their locations on a car?
A. The names of the parts and their locations are shown in the sectional views, Fig. 17.

Q. Is the Pintsch gas equipment ever converted for use with this system of acetylene gas lighting?
A. Yes, and the same piping may be used after having been tested for leaks and blown out. The only changes necessary are in the lamps, for which a simple conversion is furnished, as the ordinary form of Pintsch lamp will not burn acetylene gas.

Q. Why not?
A. Because the Pintsch lamp is arranged to superheat the gas before reaching the burner, and acetylene gas must be fed to the burner in a cool condition.

Q. Why must not acetylene gas be thus superheated?
A. Because acetylene is a very rich hydro-carbon gas and heat would cause its polymerization, which takes place at about 1,112° F., causing deposits of carbon inside the gas way and consequent blocking of passage.

Q. What, then, must be done when converting Pintsch gas equipment to use acetylene?
A. The safety storage tank must be substituted for the ordinary Pintsch tank, and the regulating valve must be changed from the Pintsch regulating valve to that of the Commercial Acetylene Company. All the superheating arrangements in the lamp must be removed and the gas brought down through a gooseneck so as to feed below the burner instead of being fed in above it.

Section of Cars showing Equipment

101—Stud Valve.
104—Filling Valve.
105—Filling Valve Bracket.
107—Filling Valve Cover
108—¼" Flange Union (H. P).
110—¼" Steel Cross.
111—¼" Steel Tee.
114—Gauge for Car.
117A—Regulating Valve
138—¼" Extra Strong Pipe.

Q. What does this accomplish?

A. The heat generated by the burning gas passes from the lamp without heating any of the parts used to convey the gas to the burner.

Q. What is the effect of fire on these cylinders?

A. The natural effect of fire would be to increase the pressure inside the tank, and if this heating were continued long enough would cause the explosion of the tank, provided it was not safeguarded.

Q. How is it safeguarded?

A. By fusible plugs formed of low melting material, which melt and permit the escape of the gas before an excessive heat or pressure can be reached.

Q. Why are the tanks filled completely from end to end with asbestos discs?

A. Because acetylene when stored in an empty vessel under pressure can be exploded by the application of heat at any spot on the tank, and this explosion is transmitted throughout the entire volume of gas in the tank.

Q. What do the asbestos discs accomplish?

A. They prevent the passage of flame or ignition in the tank, making explosion impossible.

Q. To what other uses can this system be applied?

A. Locomotive headlights, signal lighting, hand torches and portable oxy-acetylene welding outfits.

GOLD'S IMPROVED SYSTEM, ACETYLENE GAS.

Q. What apparatus is employed in Gold's improved system of acetylene car lighting?

A. A cylindrical generator passes through the car from floor to roof; a water tank is located over the door; a condenser is located in the corner of the clear deck; there is a gas outlet pipe from the generator to the bottom of the condenser, a gas pipe comes out at the side of the condenser, and there is a cut-out cock on the gas pipe to the condenser for cutting off the generator when being changed at terminals. (See Figs. 18 and 19.)

Q. Where is the chamber for holding the carbide located ?

A. At the top, extending downward about three feet, and there is a grating at the bottom of the chamber.

Q. What is below this carbide chamber?

A. A receptacle for water connected with the supply tank overhead, which serves to raise the water up to the grating, where, when it comes in contact with the carbide gas is generated, the carbide becomes "slacked" and the residue drops down to the bottom of the generator; a slight pressure is thus exerted above the water, which causes it to recede until the gas is drawn off sufficiently in using, and so the production of gas is automatically regulated

Fig. 18

Fig. 19

(259)

Fig. 20

according to the consumption. Fig. 20 shows this generator as applied to a car.

Q. Is any other apparatus used?

A. Yes, a condenser, and storage reservoir and a pressure regulator.

Q. How is the carbide put into the generator?

A. A charge of 140 pounds of carbide is put in from the roof of the car, which is usually sufficient for several nights.

Q. How is water put into the water tank?

A. Through an extension from the tank through the car roof.

Q. Is the operation of the apparatus automatic?

A. Yes; the trainmen have nothing to do but light the burners and extinguish them.

Q. How is the residue from the carbide cleaned out?

A. There is an outlet beneath the car floor by means of which the residue is cleaned out at terminals.

Q. When and by whom are generators cleaned and given necessary attention?

A. While cars are in terminal yards, being cleaned, and usually by the car inspectors or car men.

THE ADLAKE SYSTEM, ACETYLENE GAS.

Q. What is acetylene gas?

A. Acetylene gas is known to the chemist as C_2H_2, meaning that it has the constant composition of 24 parts by weight of carbon and two of hydrogen, or 92 3/10 per cent. carbon and 7 7/10 per cent. hydrogen.

Q. From what is it generated ?

A. Acetylene gas is generated from calcium carbide by bringing the proper quantity of water in contact with the carbide.

Q. What is carbide, and what are its elements?

A. Calcium carbide is a hard, dry, opaque, solid substance, known to the chemist as CaC_2, which is an expression for one unit mass of calcium, the metal which exists in lime, combined with two mass units of carbon, the element of which charcoal is composed. Calcium carbide is therefore nothing more or less than a compound which contains calcium and carbon only. The calcium in it is about 62½ per cent. and the carbon is 37½ per cent. of the weight of the carbide.

Q. What is meant by the "water-to-carbide" method of generation?

A. Water-to-carbide method of generation is a system when by water in proper proportion is fed to the carbide to create proper generation of gas. This term is used to classify this type of generation from that wherein the carbide is fed to the water. In the Adlake gas generator the two elements necessary to generate gas are inclosed in two separate compartments, the water compartment placed at a suitable height above the carbide compartment, with

suitable pipe connections for the water feed. The carbide compartment is divided into eight baskets or trays holding three pounds of carbide each; the water flows onto a spraying plate or cover above the first or top basket, slaking the carbide in this basket first, then repeating the operation successively until the carbide in all of the eight baskets is slaked. Generation takes place in only one basket at a time, thus slaking very small quantities of carbide at any one time, thus reducing the heat from generation well within the prescribed limits of overheating. Sufficient water is supplied to each basket to thoroughly slake its quota of carbide and flood the residue, thereby preventing overheating and burning.

Q. How is the water feed to the generator controlled by gas pressure?

A. The gas pressure controls the water feed to the generator as follows: As before stated, the water for generation is placed in a tank of suitable size at a proper elevation above the cartridge or carbide receptacle. A water feed pipe passes from the bottom of the water tank underneath the cartridge or carbide receptacle and up on the opposite side of the cartridge to a point opposite the main gas valve on the generator and connecting with the main gas valve by a cross connection, forming a water loop around the cartridge. The water column thus formed between the top of this loop and the bottom of the water tank gives a gravity water column pressure of approximately one pound. When the water is turned on it attacks the carbide in the first basket, entering the cartridge through the gas outlet. Gas is at once generated, passing throughout the system and being held in check only by the closed burner cocks on the lighting fixtures. Pressure is at once generated of sufficient force to withhold the further feeding of the water, as this gas pressure acts directly on the water column. When this gas pressure is reduced by the burning of the lights to a point below the weight of the water feed column then water feeds again, more gas is generated and the operation is repeated.

Q. If there be no gas in the storage tank, from whence is the gas first obtained with which to control the water feed to the gas generator?

A. The answer to the previous question also applies to this one. The gravity column pressure insures the flow of water to the carbide as soon as the water is turned on, whether the storage tank is filled with air or gas, as long as the pressure in the storage tank is below that of the water column. The condition described in this question can exist only when the system is first installed in a car before generation is started or the system is bled to admit of repairs. Under this condition the pressure in the system is always below that of the water column, and the minute the water is turned on it flows until sufficient gas is generated to create a sufficient pressure to stop the flow of the water.

Q. What becomes of the residue of each small mass of carbide as it is acted upon in succession?

A. The residue from each small mass of carbide remains in the basket until the cartridge is opened at a terminal point and the baskets removed for cleaning and refilling.

Q. What is a scrubber, and what is its purpose?

A. The scrubber answers a twofold purpose in that it removes from the gas any minute particles of lime that might otherwise pass into the piping system and clog the pipe line. It also removes the moisture from the gas by condensation, preventing the moisture from accumulating in the pipe line in the form of frost and retarding the flow of gas.

Q. How does a scrubber operate?

A. The scrubber contains a series of large and small baffle plates or discs placed alternately about two inches apart. The large plates have a two-inch hole in the center and are of the same diameter as the inside of the scrubber. The small plates are solid and about one inch smaller in diameter. The interspaces between the plates for about one-third of the length of the scrubber are filled with coke. The gas enters the scrubber at one end, passing alternately through the hole in the large plates and around the edge of the small plates, thus coming in contact with the surface of all the plates successively, also with the rough surface of the coke. The plates being of a lower temperature than the gas, the moisture in the gas is condensed. The rough surface of the coke removes the lime particles from the gas.

Q. When substituting a charged for an empty tank, why does it not affect the burning gas and why does none escape?

A. When substituting a charged for an empty cartridge the lights are unaffected because the generator is made up of two units. To remove an empty cartridge the gas valve connecting this cartridge to the generator is closed, leaving the remaining unit intact and in operative condition. No gas can escape, because the valves on the generator and on the cartridge are closed before the gas connection between the cartridge and the generator is broken.

Q. Where is the pressure regulator located?

A. The pressure regulator is located underneath the car between the gas receiving tank and scrubber and the pipe line leading to the lighting fixtures.

Q. How does the regulator operate?

A. The inflow of the gas opens or closes the inlet valve by means of a leather diaphragm attached to the valve lever.

Q. What is meant by "after generation"?

A. After generation is that generation that takes place after the water feed is stopped either by closing the water feed cock or by the gas pressure, and is due to the dampness in the residue in any one basket coming in contact with the unslaked carbide in that particular basket.

Q. Where is the outlet to the water feed pipe located in the generator?

A. The outlet to the water feed pipe is located at the upper main supply valve of the generator.

Q. What prevents too fast feeding of water when it is first turned on?

A. The back pressure of the gas prevents too fast feeding of the water at any time. The water inlet is 5/16" in diameter.

Q. For what length of time will two ordinary generator tanks or cartridges continue to furnish gas for one ordinarily lighted car?

A. The Adlake generators are made in two sizes. The large generator has two cartridges of a capacity of twenty-four pounds of carbide each, or a total capacity of forty-eight pounds of carbide. The small generator has two cartridges holding twelve pounds of carbide each, or a total of twenty-four pounds. Under the Adlake system of generation one pound of carbide yields on the average 4½ cu. ft. of gas. On this basis the large generator has a gas yield of 216 cu. ft. to each initial charge and the small generator 108 cu. ft. The supply of gas is practically unlimited, as a fresh cartridge can be applied while the lights are burning, the only limit being the ability to obtain charged cartridges. As these are portable, they can be carried on the car or shipped from point to point and picked up as needed. A standard coach is generally equipped with from fourteen to twenty ½ cu. ft. burners. The gas consumption would be from 7 to 10 cu. ft. per hour. The large generator would supply gas with an initial charge of forty-eight pounds for twenty-one to thirty hours continuous burning, the small generator with an initial charge of twenty-four pounds for ten to fifteen hours continuous burning.

Q. What is the size of an ordinary generator tank or cartridge?

A. The size of the large cartridge is 13"x31⅞". The size of the small cartridge is 8½"x32 1/16".

Q. About how many cubic feet of gas will one tank or cartridge generate from one charging of carbide?

A. The large cartridge holds twenty-four pounds of carbide, and on a basis of 4½ cu. ft. of gas per pound of carbide will yield 108 cu. ft. of gas. The small cartridge will yield one-half this quantity.

ELECTRIC LIGHTING SYSTEMS.

The Axle Light System.

Q. How are cars lighted by what is known as the "axle-light" system of electric lighting?

A. By means of a complete lighting plant for each car, which is entirely independent of all other equipment, the source of power for generating the current being the car axle.

Q. Is the apparatus the same as that used in stationary electric lighting plants?

A. It is very similar to such plants when the current is stored in secondary batteries.

Q. What are the essential parts of the "axle light" system?

A. (1) A generator for producing the current; (2) batteries to receive and store the current, and (3) a switchboard or other automatic device for rectifying and distributing the current; a regulator for output of generator current and lamp voltage.

Q. Is the axle a source of regular power?

A. No; its speed of rotation varies from nothing up to a very high speed, and also its direction is reversed whenever the car runs in an opposite direction.

Q. What would be the effect upon the lights if the electric current were furnished to the lamps direct as generated by the rotation of the axle?

A. The lights would vary in intensity with the speed of the train, and when the train stopped they would go entirely out.

Q. How is this variation and total extinction of lights provided against?

A. By storage batteries. When the car is running at sufficient speed the current generated by the action of the axle continually charges the batteries.

Q. What type of generator (or dynamo) is used?

A. The enclosed type, which, while placed in position for easy inspection, is at the same time practically dust-proof.

Q. How is the power for driving the generator (or dynamo) transmitted from the axle?

A. By means of a pulley fixed on the car axle and a driving pulley on the generator shaft.

Q. How is the connection between these two pulleys made?

A. Sometimes by a belt connection, but more often by a *friction* arrangement, whereby the pulley which originally was on the end of the generator shaft is replaced by a specially constructed friction pulley, which is kept in contact with the axle pulley by means of a tension rod.

NOTE.—Friction has been entirely done away with. Composition rubber and canvas belt is used entirely.

Q. What governs the quantity of current (or voltage) which may be generated?

A. The speed of the generator (or dynamo).

Q. Is there not danger of charging the storage batteries at a rate exceeding the safe limit?

A. Yes, unless regulated by some means.

Q. How is the voltage to the batteries regulated?

A. They have a maximum voltage and machine is built to work at that voltage, but in the Consolidated "axle light" system the voltage control is an automatic device, which varies the resistance in the field circuit.

Q. How is the field rheostat handled in the Consolidated "axle light" system?

A. By a small electric motor, with worm, wheel and ratchet mechanism actuated by any variation of the generator output from normal.

Q. How does this motor operate?

A. It is connected at all times to the generator and therefore runs only when the train is running, since it is not needed at other times.

Q. What is the percentage of voltage variation when thus controlled by this motor?

A. If the apparatus is kept in adjustment and runs as intended the voltage variation at the lamps would ordinarily be about 3 to 4 per cent.

Q. Is a storage battery usually employed with other axle systems of car lighting?

A. Yes.

Q. Why?

A. To provide for train stops, lay-overs and for low train speeds.

Q. What is the usual capacity of a storage battery?

A. In the Consolidated "axle light" system the ordinary storage battery has a capacity sufficient to supply all the lights on its cars for a period of ten hours.

Q. Is this particular battery large and heavy?

A. No; it is necessarily very reasonable in size and weight, because with the close control of voltage it is impossible to make use of high efficiency lamp.

Q. How do the lamps ordinarily used in the Consolidated "axle light" system compare with those of other electric lighting systems?

A. They consume 2½ watts as against 4 or 5 watts per candle power.

Q. What is the general method of operation of the Consolidated "axle light" system?

A. As the speed of a train accelerates, the generator, which is installed upon the truck and belted to an axle pulley, builds up its voltage until at a certain speed known as the "critical" speed (usually 12 to 15 miles per hour), its voltage is equal to that of the storage battery, with which up to this point it has not been connected. An automatic switch now closes and connects the generator in multiple with the battery and lamps.

Q. What effect will be produced by a further increase in the speed of the train above this point?

A. It has the effect of gradually putting a load upon the machine, resulting in its generating more and more current, which will go either to the battery or the lamps.

Q. How is the increased amount of current regulated?

A. Between the generator and the battery and the lamps is a

solenoid and plunger arrangement through which the generator current has to flow, and this actuates an automatic regulator. As the generator current gets stronger and stronger the solenoid exerts more and more pull upon its plunger, until it is sufficient to overcome the resistance of the opposing spring, then the machine current is at its normal value.

Q. If the speed of the train increases beyond this point what is the result?

A. Any further increase of speed would cause the spring to be overbalanced and would throw into gear the ratchet mechanism of the generator field rheostat operated by the small electric motor, which would immediately restore equilibrium.

Q. What is the result when the speed of the train reduces?

A. These operations take place in a reverse order until when the "critical" speed has been passed the automatic switch opens and disconnects the generator. The current to feed the lamps then comes only from the battery.

Q. How is the increase in voltage due to the charging current flowing to the lamp terminals regulated?

A. In all electric systems where a battery is used in multiple with the generator and lamps the voltage at its terminals is necessarily greater when charging than while discharging. To provide for this the regulator is so arranged that the moment the voltage of the battery begins to rise, due to charging current flowing, there is automatically inserted in the lamp circuit a series resistance to compensate for the increase in voltage. The variation in voltage at the lamps can only be detected by means of a delicate volt-meter, because it is impossible to so adjust the apparatus that the variation in voltage at the lamps themselves is entirely negligible.

Q. How can it be determined what amount of current is required for the lighting service each day when charging batteries?

A. The average number of ampere-hours can be easily determined and then all that is necessary is to put into the system a certain percentage in excess of what is used each 24 hours.

Q. Why is it necessary to put in any amount of current in excess of what is used in any 24-hour period?

A. To provide for losses which occur in the transformation of energy.

Turbine Method.

Q. Is any other than the "axle light" method used for lighting railway cars by electricity?

A. Yes; the turbine method.

Q. What kind of dynamo is used?

A. Sometimes a shunt dynamo, and in the "De Laval" a compound dynamo.

Q. Where is the turbine located?

A. Sometimes on the locomotive, sometimes in the baggage car.

Q. How is the turbine operated?
A. By steam.
Q. Where is the dynamo located?
A. Sometimes on the locomotive, in which case the dynamo and turbine are riveted to a common bedplate in such a manner as not to interfere with the vision of the engineer, but frequently both the turbine and dynamo are installed in the baggage car.
Q. How is the motive power of the turbine transmitted to the dynamo?
A. The propelling shaft of the turbine is coupled with the dynamo.
Q. What is the rate of revolution of the turbine?
A. Turbines of 20 and 30 horse power revolve 20,000 times a minute.
Q. How does the steam enter the turbine?
A. Through nozzles, the number required being dependent upon the steam pressure and the horse power to be developed.
Q. How is the speed controlled under varying loads?
A. By a governor operating on the steam valve.
Q. How is the heat of the locomotive boiler prevented from reaching the turbine and dynamo?
A. It does not reach them, because of both being seated on a bedplate isolated from the boiler by small blocks.
Q. In what manner are the turbine and dynamo protected?
A. They are enclosed in a dust-proof casing.
Q. In what manner is the current conducted from the dynamo to the cars in a train?
A. The two main conductors start from the binding posts of the dynamo and are carried throughout the whole train from car to car by means of plug connections. In each car a battery is switched in parallel with the mains to the dynamo, and the circuit feeding the lamps is also connected to the same mains. Before every lamp a special resistance is switched in, through the influence of which the lamp current is held constant.
Q. When the turbine and dynamo are located on the locomotive, how does the engineer set the dynamo in motion?
A. When the locomotive is coupled to a train the whole system of lines is united and the batteries being kept charged the current circulates when they are switched in. When the switch is opened the engineer sets the dynamo in motion so as to generate a current which nearly equals the tension in the line. The engineer has only to inform himself of the tension of the batteries, and then cut in the dynamo and keep the voltage at 68 volts. Whenever the locomotive is about to be uncoupled from the train he throws the main switch open and shuts down the dynamo.
Q. When the turbine and dynamo are located in the baggage car, how is steam admitted to the turbine?
A. Through a hose from the locomotive and sometimes through a reducing valve when the locomotive steam pressure is too great.

CHAPTER XII.

SIGNALS.

The signals of carriers on land and water are the most highly developed forms of communication between individuals where speech is impossible. Signaling by means of lights and flags has been used in maritime commerce for hundreds of years; and on railways some method of communicating between track and train has been employed ever since the drop of the hat, or pistol shot,—or whatever it was,—started the first locomotive on its first journey.

In the very early days of railroading in Great Britain, and even in the United States, it was customary for passengers who wanted to take a train, to stop it at any point by walking out on to the track and standing there with their feet spread apart and their hands raised full length above their heads, and facing the train.

It is a far cry, indeed, from the primitive signals of the first days of railroading to the highly developed and complex systems and methods in use at the present time. Signaling facilities now play such an important part in railroading that they are absolutely indispensable in a good many

places and for the handling of a good many kinds of traffic. The modern railway terminal station, for example, could not be built or maintained were it not for the marvelous power of signaling and interlocking systems to increase track capacity and permit the utmost use to be made of every foot of track at every moment of the day. Evidence of the importance of signaling at stations in large cities is to be found in the number and extent of the colored lights which dot the station grounds and tracks in a bewildering confusion of bright colors. The colored signals, which at sundown supplant the symbols by which communication with moving trains is had during the day, are even more plainly seen at short distances against the background of night than the symbols are during the day.

Along with the marvelous developments which have been made in signaling systems and methods, as to their mechanical structure and their applicability to operating conditions, there has come a uniform standardization. The old idea that it was necessary for each road to be original in the selection of its signaling appliances has given way to a general and thorough appreciation of the fact that standards which will make the signals on one road just like those on every other road, insofar as local conditions and circumstances will permit, are more conducive to safety.

Safety devices in the beginning were very simple, and such materials as man had at hand or

could manufacture were made use of. The mile post and the sign board at road crossings were among the first fixed signals, the former marking the termini of sections, while the latter warned the public and train men alike.

When railways were first opened in England no signals were used. Then, as a precautionary measure, pans filled with fire were affixed to the front of the engine and the rear of the train at night. One of the earliest station signals was a board which was swung across the track, like a gate, to stop the train. On the Stockton & Darlington Railway (where railway carriage was inaugurated), a lighted candle placed in the window of a station house served as a signal for the engine driver to stop. In the absence of a light, he took it for granted that he was to proceed without stopping. Flags waved by hand or on poles were among the first day signals. Red or white lights hoisted on posts were among the first night signals. The disc is said to have come into use in the year 1837. It was placed on a pole about twelve feet high, and was surmounted by a lamp. If the light was red and the disc faced the approaching train, the driver stopped. If the edge of the disc was toward the train and a white light showed from it the driver went on. The disc signal gave place to the semaphore. The latter indicated three conditions: "all right," "slacken speed" and "danger." Another form of disc signal was invented, made of metal. It consisted of a round

piece of metal balanced on its edge on a pole, and

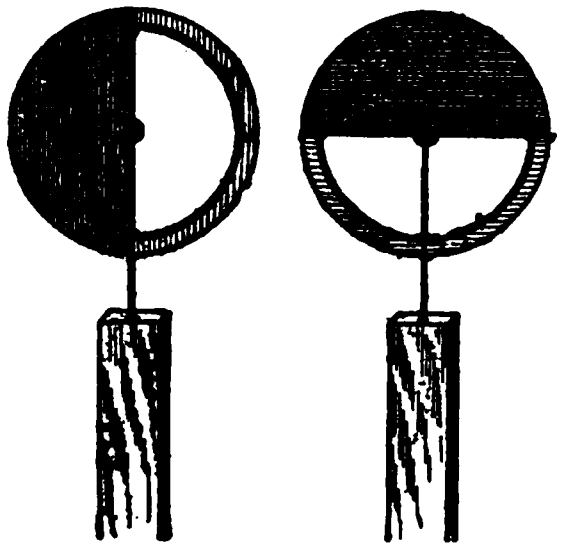

was worked by a man standing on the ground. One-half was solid and painted red; the other half was cut away, leaving a thin rim of metal. The disc had a double motion and could be turned by a cord fastened in a groove around the edge, or twisted as one would twist a coin to spin it. It could be made to assume four positions. When turned edgewise to the driver, it meant both lines were clear. When the open portion was downward and turned across the line, both lines were blocked. If the right or left-hand disc was open, it was a sign that the corresponding line was clear and the other blocked. The plan of interlocking the levers by which signals were worked was devised later on.

An early signal appliance at telegraph stations consisted of a cylinder of red flannel, about eighteen inches in diameter and two feet in height,

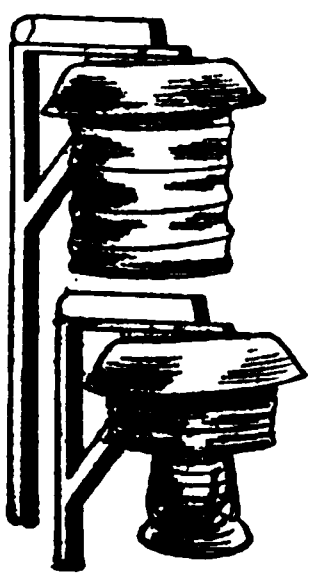

distended by wire rings and hung under an inverted tin pan, at a point where it could be seen by approaching trains. It was lifted or dropped by a rope from the office, as occasion required. When raised, it was hid in the pan; when down, it was a conspicuous red object. At night a lantern hanging inside of it gave a red light when the

balloon was down and a white light when it was raised.

The bell rope or cord, one of the most important of train appliances, was first introduced in America. The cord ran over the top of the cars, and was wound on a reel at the rear of the train,

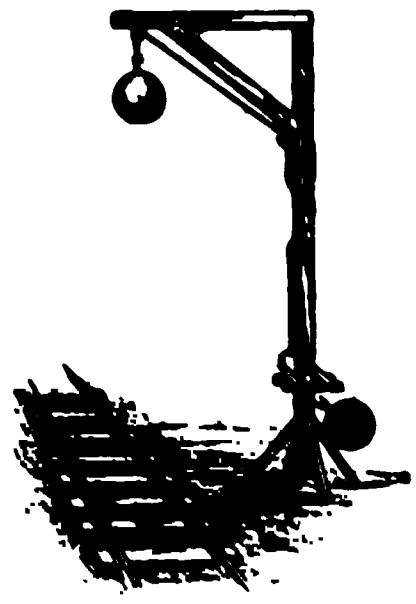

and the attendants were compelled to climb to the top of the cars, no matter how fast the train was running, in order to use the cord or adjust it in case of mishap. The cord was afterward run under the roof of the cars, one length for each car, the whole being coupled together by an ingenious contrivance when the train was made up. This proved a comparatively easy means, though an unsatisfactory one, of communicating between the trainmen and engineer. Then came the air signal, which, by pulling the cord, gave an instantaneous alarm in the engine cab. However, for fear of mishap, the bell cord was still retained.

One of the signaling devices of early days consisted of a white ball lowered over the track, by means of pulleys, when it was desired to stop a train. It was operated from the ground by means of a cord.

A primitive system, more or less used, is thus described: "A pole, similar to those now in use for carrying telegraph lines was erected at each station. It had strips of wood nailed to it, form-

ing a ladder. The agent would ascend this pole and by means of a small telescope look for the expected train, or, in the event he could not see it, gather information in regard to it from the next station. If the train was coming he showed a flag. If there was an accident or delay, he showed a large ball. These signals could be seen by the waiting passengers and also at the next station. Thus, news of the train was telegraphed to those interested in its movements. In other cases a signal post was erected commanding a good view of the line. If the track was clear and trains might proceed, a white light over a red light indicated the fact. Flags of similar color were used during the day. If the red was placed above the white, the train was required to stop."

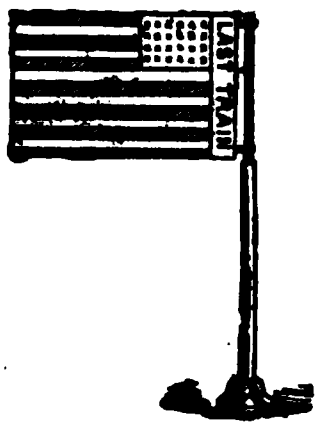

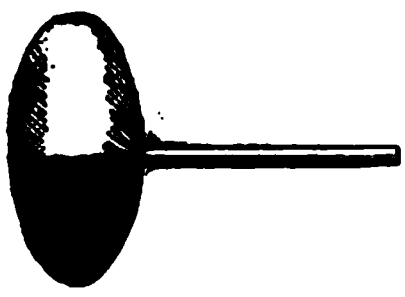

The regulations of a New Jersey road required the forward brakeman to ride on the tender while the other brakeman was expected to ride on the front platform of the rear passenger car, each being alert to give or receive signals. This same company required, in the event trains did not meet at stations according to the time table, that they should wait thirty minutes, after which they were required to proceed on their way with caution, sending a man ahead at curves with a red flag by day and a red lantern by night. If traffic was great it was a practice with some

companies to picket the line with flagmen in sight of each other. They were supplied with flags by day and lanterns by night. They signaled the approach and passage of trains in such a manner that there was always one flagman between a train and the train preceding it. This might have been called a primitive block system. Such a system was in use on the Panama Railway until several years after the United States government acquired the railway and undertook the building of the canal.

A flag made of metal, representing the stars and stripes, carried in front of the locomotive indicated on one line that it was the last train going in that direction for the day. Another device carried in front of the engine for conveying the same information was an egg-shaped ball, one-half of which was painted blue, the other half white.

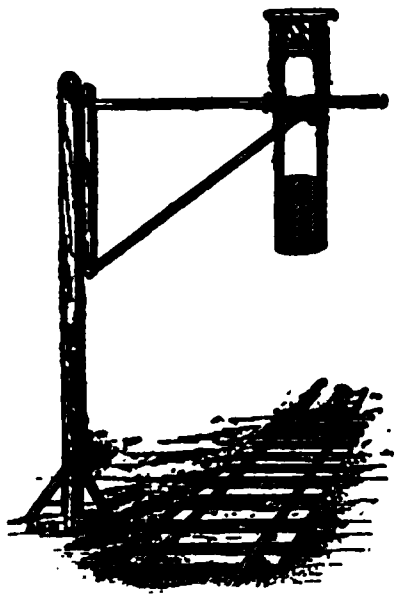

As appliances became more advanced, a gate signal was designed and placed at the intersections of crossings. It was so arranged that the arm would swing over either track. The arm was painted white, the signal red. At night a red light was placed over the top of the arm. Another signal on the same railway was made of slats of wood so arranged that they were reversible. The slats were painted red on one side and white on the other, and were manipulated from the ground

by a cord or rope. Red indicated that trains should stop; white that they should go ahead.

A signal at one time in quite general use at railroad crossings consisted of a mast having a cross-arm pivoted in such a manner as to assume three positions; horizontal, inclined and vertical; inclined indicated stop to both roads; horizontal meant clear for one road; vertical, clear for the other. At night, a red light hung at each end of the cross-arm made the various positions distinctly visible. The signal was so placed as to be seen at a great distance by approaching trains.

The primitive device for notifying brakemen to apply brakes was for the engineer to hoist a flag on the tender. Before the whistle was used engineers sometimes gave the signal of danger by raising the valve stem on the dome of the engine, letting the steam escape with a loud hissing noise. When the whistle was finally introduced, great diversity existed among railroads as to the meaning of the different signals it conveyed.

Much more could be written on the history of signals, and many interesting appliances which

have long since come into use and been discarded might be described. Suffice it to say, however, that very few of the old devices remain, and that the few that are in use are rapidly being superseded by the modern semaphore signal. The semaphore is the main stay of signal operation. Its meanings have been standardized, and its ways of working and applications to traffic have been made the subject of such thorough study that its importance is more fully appreciated than ever before.

The principal purposes for which railway signals are required are to safeguard the movements of trains and expedite their running. All of the signals which are used for these purposes on railways may be divided into two great classes. The first class comprises the signals which are not "fixed," i. e., are not set at fixed points along the right-of-way. It includes torpedoes; fusees; hand signals given by flagmen; track signals, such as flags placed on each side of a point at which the track is being repaired; signals given by a flag or lantern in the hands of employes; certain audible signals, and signals given by any person waving an object violently, at a point on or near the track, which, under the rules of all railways, is considered a signal to stop.

Signals given by flagmen and the rules governing them are fundamental in train operation. Flagmen are required to take care of the markers and other rear-end train signals. They must put them in place at the proper time and see that they

are properly displayed. Night on a railway begins at sundown and does not end until after sunrise. Usually night signals are required to be in place about an hour before sunset, and to be left in place a short time after sunrise. The flagmen's duties with respect to signals require that he must put up flag markers in the morning and take them down and put the tail lanterns in their places in the evening. Some roads have abolished the use of flags as markers and depend upon the painted sides of the lamp to catch the eye of the station man or operator, whose duty it is to see that each train is complete by making sure that it carries markers. The flagmen's signal equipment ordinarily consists of a red flag, a red lamp and a white lamp, a number of fusees and torpedoes, and a box of waterproof matches. Sometimes, signal cases in which his signals may be put are also provided.

Station agents are required to keep on hand signal equipment, which usually comprises a number of red and yellow flags and lamps, several white, and at least one green lamp, and a number of torpedoes. They are also required to have these signals always ready for use and to be prepared to display danger or caution signals in both directions from the station at any time of the day or night when it is necessary.

Torpedoes are used as warning signals. In case a train, for example, has been compelled to stop, on account, perhaps, of defective equipment, and can only proceed thereafter at slow speed, the flagman will leave torpedoes on the track near

the point of stopping so as to warn a following train that the train ahead is proceeding slowly, and to look out for it. The rules require that "when a train stops or is delayed under circumstances in which it may be overtaken by another train, flagmen must go back immediately with stop signals a sufficient distance to insure full protection, and place one torpedo on the rail." Usually when he is recalled he removes this torpedo, or, in special cases, places another one some distance from it. The flagman is usually required, also, to protect trains from running into an obstruction in the track. The torpedoes are fastened by means of clamps to the ball of the rail. If one torpedo is placed on the rail the engineer of the following train is required to come to a stop and to proceed thereafter cautiously, until he has encountered the cause of the delay or obstruction, or until he has received authority, or until it is safe, to resume his normal rate of speed, as he would, for instance, if the train which had broken down had been able to get into a sidetrack to let him pass. The distance a flagman is required to go back is usually about a half mile, but this distance may be greater or less than a half mile according to circumstances.

Fusees are night and fog signals, and are employed under circumstances similar to those which require the use of torpedoes, except that they do not need to be fastened to a rail, and thus, on account of the greater facility of handling, may be used when the train is only delayed and does not come to a full stop. The flagman can place

them in the track at the point where he would put a torpedo, or he may strike the fusee as he would a match and hurl it from the back end of the train on to the track. Sometimes it will stand upright in a tie or in the ballast — a sharpened metal point being provided for this purpose — but whether it does this or not it will burn for at least five minutes. A fusee is practically inextinguishable after it is once lighted; wind, rain, snow, sleet, and all other "powers of the storm" cannot extinguish it before it is burned out. The engineer of a following train, finding a fusee burning in the track, is ordinarily compelled to stop and wait until the fusee burns out before he can proceed. This usually requires less than five minutes. On some roads, however, on account of the number of trains that have to be run, and the delay that would be caused by a wait of such length, a burning fusee is considered as requiring only an actual stop without a period of waiting thereafter. This kind of stop is the same as that required by an automatic signal, as will be shown presently. On some roads, on track which is equipped with automatic block signals, the flagman does not have to go back past the point where he can see the signal and can be sure it is in the stop position, if the train he is protecting is more than a half mile from the signal. Torpedoes and fusees are used to supplement the hand signals which flagmen are required to give to following trains. Occasionally, in order to avoid delays, a flagman will get on the engine of the following train which

he has warned and ride in to the end of his run or to a point where he can return to his train.

Flag and lantern signals and hand signals are given by employes and other persons under various conditions, such as emergencies which require a quick stop, or in connection with such operations as the switching movements by which trains are made up and cars are sorted in yards, and at terminals and near stations. These movements are always made at low-speed, and are governed by the manipulation of the arms during the day and by lantern signals at night. Certain predetermined meanings, based on the general proposition that a movement in response to a signal given by a slow motion of the hand or lantern should always be made slowly, are given to various movements of the arms and lanterns. Quick movements likewise signify that there is necessity for a quicker response on the part of those in charge of the train.

Among the audible signals which are not fixed signals, are the engine whistles and the engine bells, used to transmit certain messages between the train crew and the brakemen, switchmen, or stationmen on the ground. An example is found in the two short blasts of the whistle which mean that a signal given by hand or lantern, or a change in the aspect or appearance of any signal that is not a fixed signal, is understood by the engineer of the train intended to be governed by it.

Another common whistle signal is used when a train, approaching an interlocking, finds that the signals are set so as to require a stop. After the

stop is made, if the engineman sees no reason why his path through the interlocking plant should be blocked, he will call the attention of the leverman in the interlocking tower by means of four short blasts on his whistle. This is usually effective in getting permission to proceed. Still another whistle signal is the warning signal which the engineer sounds on the approach to a highway crossing. This warning consists of two long and two short blasts on his whistle. There is usually a whistling post on each side of such crossings, but these posts belong to the other great class of signals — fixed signals.

Fixed signals, used on railways, comprise all signals which, from a fixed point along the right-of-way, instruct or inform an engineman as to something in connection with the conduct of his train. This class includes semaphore signals, disc signals, low or dwarf signals, switch targets, slow signs, stop signs, signals used at stations to indicate that there are passengers waiting to take the train, whistling posts, flanger signs, and all other signs or signals of any sort which have a fixed location and are intended to restrict or control the regular movements of trains on account of a condition existing at, or a certain distance from, the fixed signal.

The most important fixed signal, and the one which has been the means of accomplishing the greatest results in safeguarding and expediting train movements, is the semaphore. But the kind of fixed signals, which are greater in number than any other kind, is that one which includes switch

targets. These signals consist of plates of metal which surmount switchstands, and which, by the displaying of certain shapes and colors to an approaching engineman are made to indicate whether or not their respective switches are open or closed for the passing of the train on the main line. Some switch targets display a shape or color broadside, to the approaching train when a stop or a turnout movement is required, and show only the edge of the metal plate in case the switch is set for the train to proceed. The edge is practically invisible at a distance. The usual arrangement of switch targets is such that a red surface is exposed in the direction of an approaching train when the switch is open for a movement on to a side track or for a divergence from the main line at a junction. And when the switch is set for proceeding straight ahead the color is usually white or green, or, on some roads, yellow. The shape of the metal plate on the target is usually round, but many targets display a surface the length of which is at right angles to the vertical switchstand when the switch is open, and a surface the length of which is diagonal to the vertical switchstand when the switch is closed, or in position for a train to go straight ahead. Usually the same indications of the position of the switch are given for the guidance of an engineman approaching it from the direction of the divergence, as for an engineman to whom it is a "facing point" switch, i. e., one approaching it in the direction to be diverged.

Whistling signs require the engineman to sound his whistle at certain points, as near stations, and, as has been mentioned, at highway crossings. Flanger signs require him to raise his flanger to avoid contact with any part of the track, such as planks of a highway crossing. Other fixed signals call for various other acts on the part of an engineman as required by local conditions, such, for example, as a flag stop, or a full and complete stop on the approach to a drawbridge, or a stop at a grade crossing of two railway lines. These fixed signals do not give information with respect to the condition of the track ahead, that is, as to whether or not it is occupied by a train or is safe to be traversed by a train, but confine their messages to commands to do certain things which are required by conditions in the immediate locality. The sign which says, "reduce speed to six miles an hour," which is sometimes placed at the limits of a city, will serve to illustrate the character of the information conveyed by this kind of fixed signals.

The semaphore signal consists of an upright post, usually about twenty-five feet high, near the upper end of which a blade about five feet in length, is pivoted at one of its ends. The semaphore was applied to railway signaling purposes in 1842 in England by C. H. Gregory, and was selected on account of the clearness with which the various positions of the arm with reference to the upright post could be distinguished at a distance. The position in which the arm can be most clearly seen is that one in which it makes a

right angle with the upright post, and accordingly this position of the arm was early adopted as the signal for stop. When the semaphore was first used there were only two signals to be given, these being the signals "to proceed" and "to stop," the stop signal being shown in case there existed any reason for not proceeding, and being thus in the nature of a limitation on the right to proceed. The matter of certainty was, and still is, considered a good deal more important in the display of the stop signal than in the display of the proceed signal. No better or more easily discernible stop signal than the horizontal position of the semaphore arm has been developed, so that this position of the arm has grown into almost universal use to signify stop.

It is plain that the pivoted semaphore arm may be made to assume a number of different positions with reference to the upright post, and that by means of these positions a number of different messages can be conveyed to an approaching train. Thus, for example, when a semaphore arm is inclined vertically, i. e., when it is parallel to the post, it may be made to mean one thing, and when at an angle of less than ninety degrees to the post, it may mean something else. As a matter of practice when a semaphore arm is in the vertical position it is made to indicate proceed, and when it is inclined at an angle of less than ninety degrees to the post it may indicate either proceed or proceed with caution, according to whether two-position or three-position signaling is used.

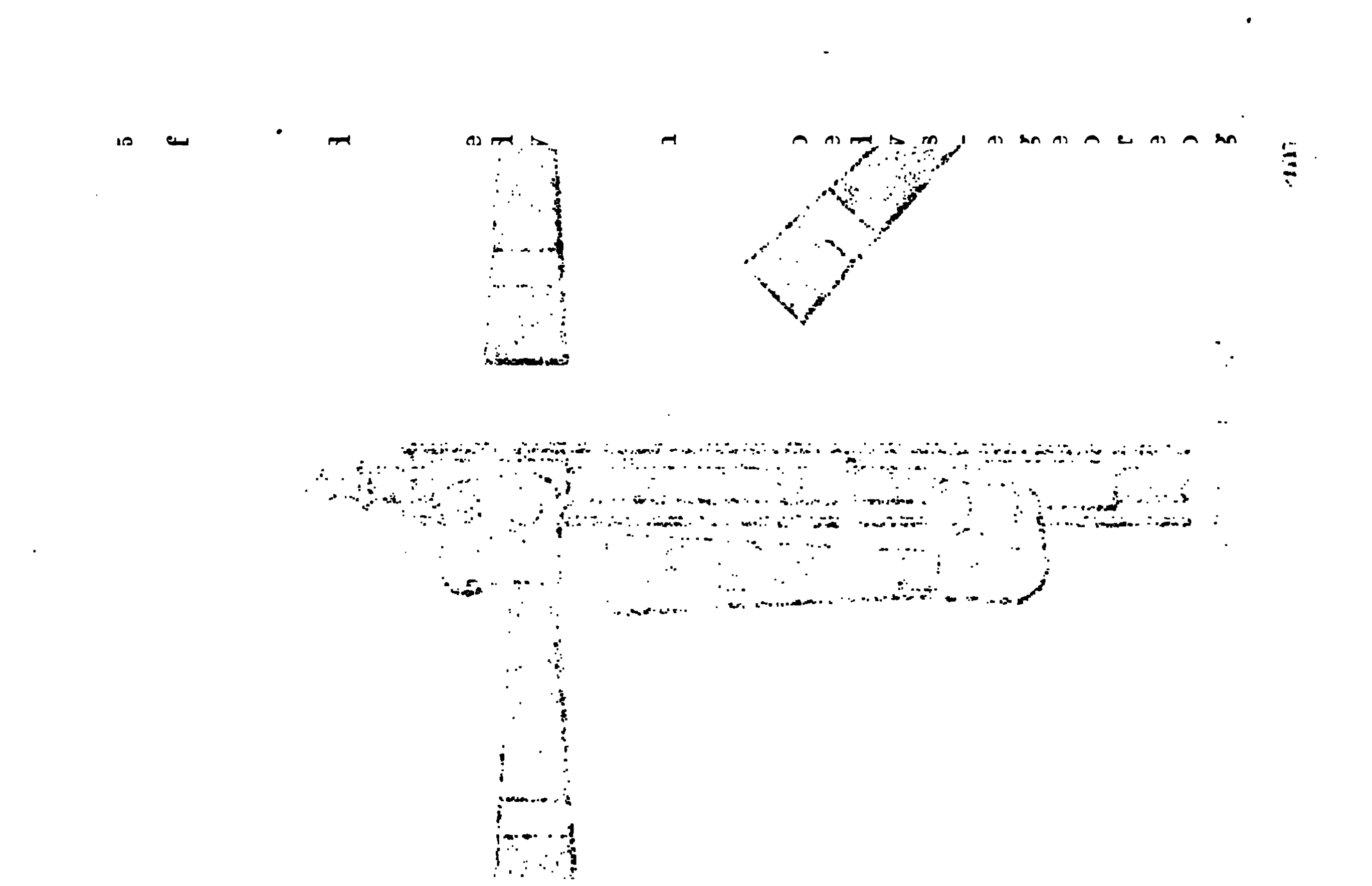

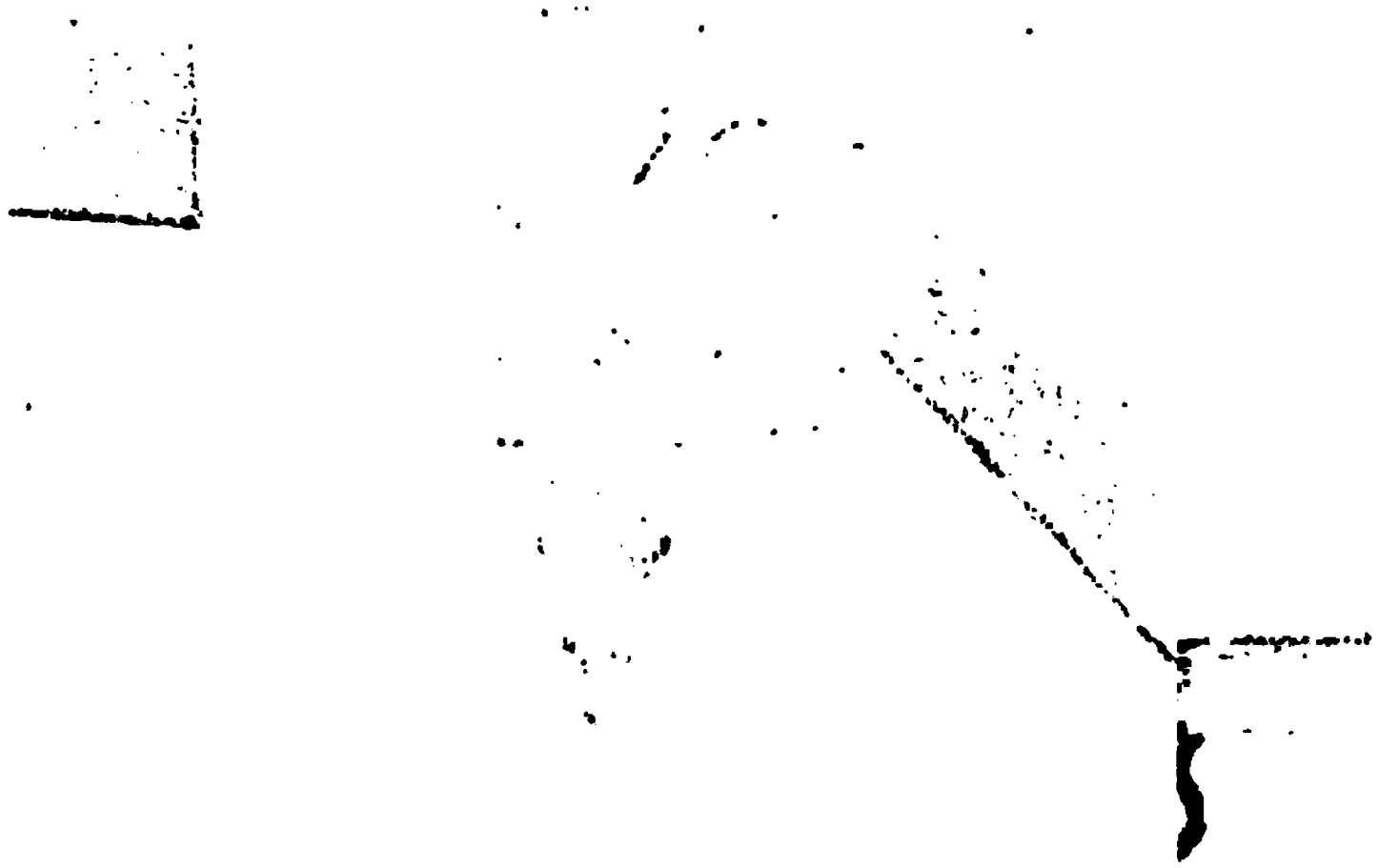

The American Railway Association approves of three fundamental signals, which are:

1. Stop;
2. Proceed with caution;
3. Proceed;

and two supplemental indications to be used where required, which are:

4. Proceed at slow speed;
5. Proceed at medium speed.

This association also says as follows: "The fundamental 'proceed with caution' may be used with the same aspect to govern any cautionary movement, for example when:

a. The next signal is 'stop;'
b. The next signal is 'proceed at low speed;'
c. The next signal is 'proceed at medium speed;'
d. A train is in the block;
e. There may be an obstruction ahead."

Two-position signaling involves the use of two positions of the semaphore arm, as follows: The arm in the horizontal position indicates stop, and the arm inclined at sixty or seventy degrees below the horizontal indicates proceed. The signals which give these indications are made with square-end blades. Soon after signals of this kind were first installed it became evident that outlying signals should also be put in to regulate the approach to them. A signal might require a stop so close to a point of danger that if the engineer were unable to stop within a short distance he would be likely to have an accident. So signals to enjoin caution upon an engineer approaching

square-end signals were installed, and are now widely used. The signals placed at danger points are called "home" signals, and any signal regulating the approach to a home signal is called a "distant" signal. To distinguish home signals from distant signals the blades of the latter are made with a forked end. But distant signals occupy the same positions as home signals, i. e., a distant signal arm occupies the horizontal position for one indication and the position inclined at sixty or seventy degrees below the horizontal for the other indication. But unlike the home signal the caution signal does not indicate stop or proceed. When a caution arm is in the horizontal position it indicates only "proceed with caution," and when it is in the inclined position it indicates only that there is no need for proceeding with caution insofar as the home signal is concerned.

The home signal, and the distant signal to regulate the approach to it, were employed at interlocking plants for many years before they were put in service to regulate the use of the blocks comprised in the automatic block system. In the latter application, however, to use home and distant signals requires two signals for each block. This operates to make the expense of automatic signaling much larger than is considered necessary for the effective protection of certain kinds of traffic. It has been found, however, that when the blocks are short, the distant signal can be put on the next home signal mast back of the home signal which it governs, and thus the expense of one signal mast, and its placing in the ground,

can be saved. Thus it is that in this form of signaling, which is still used to a considerable extent, there are two arms on each mast, the top arm being the home arm and governing the block immediately ahead of the signal, and the bottom arm being the distant and indicating the position in which the engineman may expect to find the next top arm or home arm in advance.

All of the indications that are conveyed by the two arms working in two positions and mounted on the same mast can be given just as well, however, by one arm by making it occupy three positions, and the expense of one arm and the mechanism necessary to move it may be saved, in the kind of signaling known as "three-position." Here the arm in its horizontal position still indicates "stop," but in the "proceed" position it is parallel to the upright mast instead of being inclined at sixty or seventy degrees from the horizontal. The indication formerly given by the distant signal, i. e., the indication to "proceed with caution," is here conveyed by the arm at forty-five degrees from the horizontal, or midway between horizontal and vertical. Three-position signaling is widely used and is supplanting other kinds of signaling on roads of fast and heavy traffic.

Automatic block signaling began to be installed about 1879. But it had not been in use very long before it was discovered that under some conditions the semaphore arm may be more clearly discerned when it is inclined above the horizontal to indicate "proceed" and "proceed with cau-

tion'' than when it is inclined below the horizontal. In other words, there are many situations where the upper quadrant indications, i. e., the indications given by the arm when moving in the upper part of a vertical circle, can be more easily seen by an approaching engineman. The discovery of this resulted in trial installations of upper quadrant signals, and the advantages offered by the indications proved to be so many in number, and so useful in operation, that upper-quadrant signaling has come into favor very rapidly, and is now displacing lower-quadrant signaling on almost every railway in the country.

In England, semaphore arms extend to the left of their masts, but in the United States the signals are usually so placed with reference to the track, that the arm extends to the right as seen by an approaching engineman. The movements of the semaphore arm for two-position signaling are, therefore, usually in the lower right-hand quadrant, and for three-position signaling in the upper right-hand quadrant. There are cases, however, as in deep cuts and where poles along the right-of-way are thickly set or closely placed, when signals to the right of a mast cannot be seen clearly. In these cases indications are given to the left of the mast, and usually the upper left-hand quadrant is employed.

The indications of semaphore signals, therefore, are conveyed by positions of a movable arm attached to an upright post, and so arranged that the arm with a square-end blade indicates:

"Stop"

when extending at right angles to the right of the upright post; or when extending at right angles to the left of the upright post; and

"Proceed with caution"

when extending at forty-five degrees from the vertical in the lower right-hand quadrant; or the upper right-hand quadrant; or the upper left-hand quadrant; or the lower left-hand quadrant; and

"Proceed"

when extending vertically upward; or when extending vertically downward.

The arm of the distant signal,— the arm with a forked blade — indicates:

"Proceed with caution"

when extending at right angles to the right of the upright mast; or when extending at right angles to the left of the upright mast.

The semaphore signal is used to give indications under three conditions:

First, it is employed to govern the entrance of a train into a block, and in that case is operated automatically by an electric mechanism;

Second, it is used at interlocking plants, and is there under the control of the leverman, whose duty it is to set up the various routes through the plant; and

Third, it is used at or near stations to indicate to an approaching engineman whether or not he is to stop for orders or may proceed straight through without stopping.

With the possible exception of switchstand tar-

gets there are now in use more semaphores than any other kind of fixed signals.

Signals given by colored discs have been employed to some extent, but the semaphore is so much more effective as a medium for conveying information to a train that it has superseded discs except on a few roads. A common form of disc signal comprises a disc of colored material, such as silk stretched over a wire frame, or a thin sheet of metal, suspended from an electromagnet, the whole mechanism being fitted inside of a banjo-shaped box which surmounts the upright post. The mechanism is so arranged that when the magnet is de-energized the disc is displayed behind a glass-covered opening in the front of the box, and, when in that position conveys the indication to stop. When the magnet is energized the disc is pulled away from behind the glass and a background of a different color from the disc is the means of indicating to the engineman that he can proceed without restriction. Other discs, some of which are pivoted as on a vertical diameter and so arranged that they display their edge toward an approaching train when there is no reason for stopping, are also to be found on a few roads; but their use is not general, and in time they will be supplanted by the semaphore.

A form of fixed signal, which is used almost altogether at drawbridges, is called the "smash" signal, and is so designed that if an engineman should attempt to pass it when it is swung out over the track he would break it to pieces, and by means of its destruction in this manner would be

informed that he was just about to run into disaster.

The appearance of a fixed signal when it is in one of the positions which have been adopted as standard for conveying indications to enginemen is called the "aspect" of the signal. The information or message which the signal is intended to convey to an approaching train is called the "indication" of that signal. To illustrate —the "caution" indication, i. e., the signal to "proceed with caution," may, as has been shown, be given by a three-position signal in four different aspects; — with the arm inclined at forty-five degrees from the horizontal in any of the four quadrants in the vertical circle in the plane of which the semaphore arm moves. Again, the "stop" indication in the case of the semaphore signal has two aspects: — the horizontal position to the left of the upright mast, and the horizontal position to the right of the upright mast.

All indications which are required to be given to an engineman in order that he may regulate the movements of his train with entire safety and with the maximum of economy, are pretty well settled upon and standardized. The reason why there are so many of them is not difficult to understand when the fact is appreciated that indications can be given more quickly and with more certainty of being understood and correctly interpreted under certain conditions, by the use of particular aspects which are specially suited to these conditions.

Fixed signals have another classification which has to do with the importance of their indications. This classification is as to whether they are "high signals" or "low signals." On account of the comparative ease of seeing the signals at a height of twenty-five feet or more, signals at this height are intended to govern train movements made at greater speed than those which are regulated by signals placed closer to the ground. All signals which are above the height of a car or engine are considered high signals, and have a relation to the higher speeds. Signals which are close to the ground, below the height of high signals, are called low signals and govern movements at lower speeds, such as are necessary when a train leaves the main track for a siding movement, or to cross over from one track to another, or when a train proceeds into or out of a terminal or through an interlocking plant. A common form of low signal is in the shape of a miniature semaphore. In this form it is called a dwarf signal. Dwarf signals, and in fact all low signals, usually indicate nothing at all with respect to which track a train is to take after it has passed the crossover or turnout at which the signal is placed. It is sufficient that the signal gives the right to proceed at low speed. It is different with high signals, however, and in many cases not only is the indication to proceed conveyed to the train by this kind of signal, but also the circumstances governing the giving of this indication are so set forth in connection with the indication itself that the engineman is informed

as to which track or route he is to take after he passes the signal.

All indications given by the position of a semaphore arm or the color of a disk are clearly discernible in daylight. But this is not the case at night. When the mantle of darkness descends upon the activities of a railway system, the position of an arm or the color of an object cannot be distinguished, and something else must be substituted for them. The best that can be done at this time of day is to revert to signaling by color rather than by position. Thus it is that colored lights are used at night to present the indications which in the day time could be read from the positions of the semaphore arms or the color of the disc. The colors employed for the night indications are as follows:

Red for "stop";

Green or yellow for "proceed with caution"; and

White or green for "proceed."

When green is used for proceed yellow is used for caution, and when green is used for caution, as it is on several large and many small roads, white is used for proceed. In the beginning of signaling the white light was used universally for proceed, but this has given way to green on the majority of roads on account of the fact that if a red glass were broken out from in front of a danger signal a white light would be left to indicate proceed, when the conditions really demand that stop be indicated; and also on account of the difficulty of distinguishing between white signal

lights and white lights in buildings along the right-of-way. Green may be distinguished with much more certainty than white, though not quite as far away. Where green is used for clear, if a white or yellow light should appear when conditions were such that it should not be shown, obedience to its indication would keep the engineer on the side of safety, as if he should proceed with caution, as required by the white or yellow light, he would not run much risk of missing the cause of the danger indication which the white light might have displaced on account of a broken red glass. Nor would he get into trouble if a white light were showing instead of a proceed signal, as it would if a green glass were broken out.

There are conditions which demand that signals be given by color during both night and day at certain points. Such cases, however, are the unusual. They arise in connection with terminal and station signaling, and with signaling in tunnels. The space available for erecting signals in these places is usually very meager. In fact it would not often be possible to operate semaphores in the small space provided. In view of this, signals given by lights are employed. Light signals of this kind are cheaper than semaphores, and, largely for this reason, have been used by a number of electric railways, the traffic on which requires automatic signaling but will not warrant the installation of semaphores and their more expensive operating mechanisms.

Having examined the different kinds of signals, the next subject to consider is how the signals

are operated in connection with each other to form the great chain of protection which night and day is thrown about the movements of thousands of trains on thousands of miles of railway. Trains are safeguarded to some extent by the rules and methods of operating. One way in which this is done is by the use of the time interval system. This is strictly a method of operating, however, and cannot be considered a signaling system. But where traffic is light it proves effective, although not always safe, in getting trains over the road. The time interval involves the maintenance of an interval of time between each two trains that pass in the same direction, and the adjustment of the time of running of each train in the opposite direction so that certain meeting or passing points can be arranged. Before the telegraph came into service the fixed signals at certain points along the line were kept at "danger" for a specified time after a train had passed before another was allowed to enter. As traffic increased the delay and confusion incident to this method led to the introduction of the telegraph, which immediately became an important factor in railway operation. Now the time interval wherever used requires that all of the stations at which trains may stop be in communication with each other. This communication is accomplished by the telegraph and telephone, the practice of dispatching trains by telephone having supplanted the use of the telegraph on the majority of railways.

The space interval principle, which is the principle of all effective signaling, requires that trains be kept a certain distance, rather than a certain length of time, apart. The distance is governed by the conditions of traffic on a particular line. The working of the space interval system is accomplished by dividing the road up into sections or blocks and allowing only one train at a time in each block.

There are two methods of operating under the space interval system. One is called "absolute blocking," and requires that under no conditions shall more than one train occupy the same block at the same time. This is usually employed in connection with passenger traffic, though it is sometimes used on roads where, during a part of the day, it applies to both passenger and freight traffic, and during another part of the day is displaced by the other method of working, which is known as "permissive blocking." In permissive blocking one train may follow another into a block, the second train proceeding under a caution signal or in possession of a caution card which enjoins upon the engineman the utmost care to avoid running into the train ahead. It need hardly be mentioned that permissive blocking applies only to following trains.

Space interval working is accomplished either by manual or automatic signaling systems. There are two kinds of manual block systems. These are, (1) the simple manual block, and (2) the controlled manual block.

The sections or blocks into which a railway line is divided under space interval working usually vary in length from three thousand feet to the length of the line between two adjacent stations which may be as short as two miles or as long as ten or fifteen, although blocks of the latter length are rare except on lines of very sparse traffic. The length of the block is governed by local conditions, and also may depend [illegible] the kind of signaling employed [illegible] a governing factor [illegible] signaling [illegible] entrance [illegible]

between the time interval and the space interval system of this kind is that, in case of a breakdown, at a point between two stations, the engineer of the following train proceeding on the time interval system often does not become aware of the fact that the preceding train is not under full headway until it is too late to avoid a rear end collision. Under the space interval method of working, however, the engineer of a following train enters an occupied block in possession of a caution card, and when there is any other train in the block and that train breaks down, the operator at the end of the block toward which it is proceeding has a check on its running and can avoid letting the train in the opposite direction into the block until he knows that it has passed or is sure that it has not passed.

Various methods of reminding operators that they have orders for trains and that trains have entered the block and have passed out, have been devised. These take the form of attachments to the levers by means of which the station man or operator controls the positions of the train order signals at his station, and of electrical devices for inter-communication between adjacent points by means of which pointers and electric bells may be used to serve as reminders. The use of devices of this kind has led to the amplification of the means of communicating from one station to another into a system whereby one operator has an actual physical check upon the actions of the other operator.

The system in which this is done is called the "controlled manual system." It provides for two electrically operated machines, one in each station. Connecting wires between the machines provide that the operator at A, for example, must make certain definite movements in connection with his machine before B can operate his own machine. Since it is necessary for B to operate his machine in order to throw the signal at his station to the clear position and let a train proceed into the block, it is evident that he cannot give a clear signal unless both himself and A know what he is doing. Thus A has a check on B, and B has a check on A. The controlled manual system takes two forms, the "lock-and-block" and the "staff." The lock-and-block in turn has three forms. These are, (1) the simple communication between adjacent stations; (2) this communication and electric track circuit protection for part of the line between the stations; and (3) this communication with complete electric track circuit protection for all of the line between the two stations.

The track circuit is the most important adjunct to signaling which has been invented, and is the means by which the automatic block signal system has attained a stage of development which warrants its extensive use. The track circuit is an electric circuit which uses the rails of the track for part of its path. The rails are divided up into sections which are insulated from each other by what are called insulated rail joints. These joints prevent the leakage of current from one track

feet in length, and all the rails within a [illegible] are bonded together so as to form an [illegible] connection of less resistance than would be [illegible] by the parts of an ordinary rail joint. [illegible] ing is accomplished by drilling small [illegible] rail at each side of each joint and wed[illegible] of these holes the end of a wire which [illegible] end is wedged in the next rail.

At one end of each section there is [illegible] battery; and at the other end there [illegible] which is an instrument for repeating [illegible] cuit the effects of an interruption [illegible] cuit.

In the normal condition of the [illegible] electric current starts from the [illegible] through a connecting wire to one [illegible] through the rail to the other [illegible] At this point it leaves the rail [illegible] a connecting wire which is fas[illegible] goes through the relay, a [illegible] connecting wire, to the op[illegible]

than one track section in the block), will remain in its clear position. If, however, a train enters the section the electric current finds a shorter path from one rail to the other than through the connecting wires and the relay. This path lies through the wheels and axles under the cars in the train. The current in taking this shorter path de-energizes the relay and allows it to release the circuits which have been holding the signal in the clear position at the block entrance, and this signal immediately assumes the stop position, indicating to a following — or opposing train if there is but one track — that the block is occupied. It is a principle of signal systems and mechanisms that they are built so that any failures will be "on the side of safety." Thus a break in a rail which is part of a track circuit will have the same effect on the relay as a train in the block, i. e., it will interrupt the flow of current through the relay and cause the signals at the ends of the block to assume the stop position. Wet track, cinder ballast, or an open switch will do the same thing.

In the form of controlled manual signaling which has the track circuit for part of the distance between stations,— the second form of lock-and-block previously mentioned,— the track circuit is placed near the stations at each end of each block, and electric locking arrangements are used to provide that when a train has passed A, for example, going toward B, the action of the wheels and axles on the track circuit will lock up B's instruments as well as A's until after the train has passed over the track circuit at B's station,

inches long and weighing one or two pounds. There are two machines at each station, to govern movements in each direction. Thus, if there were a staff machine at A to govern movements between A and B there would be two machines at B, one corresponding to the one at A and the other operating in conjunction with the machine at C. Each machine contains a number of staffs, and each pair of machines, as, for example, the pair operating between A and B, and the pair operating between B and C, is so interconnected that the operators at two stations must co-operate in the performance of certain acts before a staff can be taken out of either machine. After a staff has been removed it is impossible to take out another from either of the two connected machines until the first staff has been put back into either machine. An engineer proceeding toward B would ask for a staff at A. A and B would co-operate to remove one staff from A's machine. A would give this staff to the engineer, and he would then proceed toward B; but until he had arrived at B and his staff had been deposited in B's machine neither A nor B, nor both working together, could get a staff out of either machine. The engineman, after giving up the staff he received from A, would then receive another staff from B, which would be authority for his movement from B to C, and while he was in possession of that staff from B's machine neither B nor C could remove a staff from either of their connected machines. Arriving at C the engineer would get another staff to take him to D, and so on to the end of his journey.

Meanwhile a train going in the opposite direction may have been waiting at C for the arrival of the train from B. As soon then as the first train has proceeded toward D, C and B co-operate to enable C to withdraw a staff, which he does, and this staff, after C gives it to the engineer of the waiting train, permits him to proceed toward B.

Means are sometimes provided in connection with the staff system so that an engineer does not have to stop his train in order to pick up a staff. In case such means were provided at station B, for example, a device resembling, somewhat, a mail crane in its general appearance and method of operation, would receive at B, the staff which the engineer of the last mentioned train had picked up at C, and at the same time give the engineer the staff which would vest him with authority to proceed from B toward A,— this without a stop at B, and probably with even no reduction in the speed of the train.

Under some arrangements of the staff system means are provided whereby the engineer at the head of the train and the conductor and brakeman on the last car may each be given half of the staff. This is to insure that the train has not broken in two and left one or more cars standing between the stations, on track on which complete track circuit protection is not provided. This method of working is employed largely for movements through tunnels. If no such precautions were taken, and a few cars should break from a train and be left standing in the tunnel, the engineer might, in the absence of the proper watch-

fulness on the part of the operator and the proper care on his own part, have his staff put back into the machine at X, the outgoing end of the tunnel, get another and go ahead, in which case an opposing train entering the tunnel from the same end, X, could pick up its staff, and then have authority to proceed into disaster in the tunnel. The staff system is also employed to control movements over drawbridges, especially those where double-track roads operate only a single track over a bridge. Insofar as the machinery of the staff system is concerned it is practically infallible, and the engineer who has possession of a staff has about as much assurance as human ingenuity can give him that his train is the sole occupant of the track section upon which it is running. The proper inspection by station operators as to whether or not each train that passes carries proper markers makes this form of operating about as safe as can be devised.

The form of space interval working which has been found the most generally satisfactory and which offers the most advantages for protecting traffic is the automatic block system. This system requires the installation of continuous track circuits throughout the entire length of the track to be protected. Each block has a signal at its entrance end. On double track these signals govern movements in one direction only on each track, and on single track there are signals for each direction. Each signal is operated by an electric mechanism, which automatically pulls the signal to the clear position when there are no

train wheels in the track section, and automatically releases the signal, permitting it to return to the stop position, as soon as train wheels enter the section, or when there is anything wrong with the track circuit, such as a broken rail or a washout, or anything else which would destroy the integrity of the circuit.

Automatic block signals are placed, on the average, about one mile apart on lines of track between stations. Inasmuch as they do not require to be worked by hand, being automatic in their operation, they can be out of sight of the operators at stations and still be depended upon to give the proper indication as to the condition of the block. They are thoroughly inspected at short intervals by men who are employed especially for that purpose, and repairs are made in the shortest possible time after trouble is reported.

The working of the automatic block signal system is such that when a train enters the block the signal at the entrance to the block immediately assumes the stop position. When three-position signaling is used, the next signal behind the one at the entrance to the block assumes the caution position, in which it is inclined at forty-five degrees from the horizontal. And if two-position signaling is employed, the distant signal behind the signal at the entrance to the block also assumes the caution position, but in this case it is a forked blade and is at ninety degrees to the upright mast. Thus the following train always has two signals between it and the train ahead.

Under some conditions distant indications are dispensed with, and a system of overlaps is used, which maintains two stop indications between the preceding and a following train. This overlap provides that the signal at the entrance to a block remains at stop as long as a train occupies the block and until that train has completely passed a point usually about half-way through the next block. This method of signaling, if generally used, however, would keep trains much further apart than is necessary, except in certain congested situations, unless the blocks were very short. In this event the cost would be needlessly high. For this reason its utility is confined to parts of roads where traffic of special kinds has to be handled under severe conditions.

All kinds of semaphore signals, except those working in connection with the automatic block system, are operated by hand, and thus are under the immediate control of some human agent. Any signal so controlled may mean, when in the stop position, that there is some verbal or written communication to be interchanged between the operator or station attendant and the train crew. For this reason all of the signals, except automatic block signals, mean, when in their stop position, that the train must stop and stay until it is authorized to proceed—until the restriction which the stop signal has placed upon its movements has been removed. A train approaches a station, the engineer sees a train order signal at stop, and he brings his train to a stop. After the orders have been delivered, and the message conveyed, the

signal is cleared by the operator and the train can then proceed. But with the automatic block signals the case is different. Set as they are at intervals along the track, far from stations, and out of sight of the places of work of the human agents who control the manually operated signals, the automatics could not well mean the same thing that manually controlled signals mean. If an engineer were to stop at an automatic signal which was in the stop position, and then wait at that signal until the restriction was removed and the signal indicated that he was again to proceed, he might never be given that necessary authority, as the signal might be out of order and unable to be cleared until repaired. For in automatic signaling the "on-the-side-of-safety" principle of the track circuit is still further carried out in that when there is anything wrong with any part of the system upon which the signals depend for their operation, they assume the stop position and stay there until the trouble is remedied. The engineer, seeing an automatic signal at stop, therefore has no means of knowing from that signal whether it is in that position because there is a train in the block ahead or because there is something wrong with the track circuit or the mechanism of the signal. A wire may have broken in the pole line along the track, a section man may have torn some bond wires loose from one of the rails, or something else may have interrupted the electric circuit sufficiently to de-energize the relay and allow the automatic signal to go to stop. So it would be impracticable to

require an engineman to stop and wait at an automatic signal in the stop position until that signal cleared up. The stop indication of the automatic signal, therefore, is interpreted to mean "stop and proceed," i. e., bring your train to a full stop and then, after waiting an interval of time, proceed with caution, prepared to stop short of any obstruction in the block. On double track, then, an engineer, encountering an automatic signal at stop, brings his train to a full stop and then proceeds cautiously through the block, prepared to stop in time to avoid colliding with a train in the block and at the same time going so slowly that he would not be likely to have an accident if there were a broken rail in the track over which he is proceeding. As soon as he "picks up" the signal governing the next block in advance he can increase speed if that signal is in the clear position, and resume his normal rate of speed. If it is in the stop position, however, he must make another full stop and then again proceed cautiously. [illegible] next block. On single track, however, [illegible] greater in passing an automatic block signal at stop, as here the signal may have been set to that position by an opposing train [illegible]. This train has entered the block [illegible] under a clear signal and is [illegible] with a diminution of speed. It [illegible] for him to stop and [illegible] because, even though he [illegible] he might not be able [illegible] the approach of the train coming in [illegible] come to a stop, and

there would be a head-on collision. Accordingly, the rule on single track is that an engineer must bring his train to a full stop at an automatic block signal indicating stop and must then send out a flagman to precede him through the block. Usually the rule requires that he wait five or ten minutes and then follow the flagman. This gives the flagman time to get far enough ahead so that he can stop an opposing train short of a collision, even though it should be going at a good rate of speed.

There are two systems of automatic block signaling with which engineers and trainmen have to become acquainted. These are the system in which the signals stand normally in the stop position, in which they are known as "normal danger" signals, and the system in which they stand normally in the clear position, in which they are known as "normal clear."

In the normal danger system the signals are always in the stop position and will not assume the clear position except upon the approach of a train to an unoccupied block section. In this system a preliminary, or clearing, track section three thousand feet or more in length is provided ahead of the signal at the entrance to the block. The entrance of a train into this preliminary or clearing section operates on the relay to de-energize it, and this acts in such a manner that the signal is pulled to the clear position, so that the engineer can see it move from a point far enough away so that he does not have to stop and wait for it to move. As soon as he passes the signal

it immediately goes to the stop position, and it will stay there until the block which it governs is clear and another train approaches the entrance to the clearing section.

In the normal clear system, however, each signal stands normally at clear. It assumes the stop position when there is a train in the block which it governs, but as soon as the train has passed out of the block the signal governing the entrance to that block immediately assumes the clear position.

There are certain advantages claimed for each of these systems. In behalf of the normal danger, it is said that an engineer who sees his signal go to clear in front of him is much more certain that the signal means what it says than can be the case with the normal clear system, for in the latter system it is possible that a signal which has been standing in the clear position for some time will stick there and thus permit a train to enter a block at speed, when it should have indicated stop. This objection, however, is not considered a vital one, for the reason that such a stage of development has been attained in the manufacture of signals and their operating mechanisms that clear failures of normal clear signals occur only about once in several million operations. They are dangerous failures, it is true, but their infrequent occurrence, and the fact that there is generally about half a chance that the cause of the danger which the false clear signal failed to show up was a train in the block and that this train has withdrawn, make the argument of too little value

to prevent the widespread use and development of the normal clear system.

It was formerly the practice in connection with signals on a number of roads, and is still the practice on a few, to have them normally clear and then to require the engineer to see them begin to move toward the stop position as he approached them. A short track circuit section was provided far enough ahead of the signal so that when his train entered it he would see the signal begin to move. In case he did not see the signal begin to move toward the stop position he was compelled to treat the indication as if it had been a stop indication and bring his train to a stop. This, however, cannot be considered practicable for anything but slow-speed operations. The inertia of the signal mechanisms now in use is such that a train moving at sixty miles an hour would have to have a very long section in advance of the signal in order that an engineer could be sure of seeing the signal begin to move. And in case he did not see it begin to move he would be almost half-way through the block before he could stop. Thus it would be impracticable to maintain this method of operating on high-speed track, and so it has given place to the normal clear system, and remains in service on only a few roads.

On some roads special pains are taken to distinguish between signals at stations, such as train-order signals, signals at interlocking plants and automatic block signals. The distinction is usually made in these indications by the shape of the end of the blade. The round-end blade is a train-

order signal, the pointed-end blade is an automatic signal and the square-end blade an interlocking signal.

Further distinction is made between automatic block signals and signals at interlocking plants, especially with reference to the night indications. The American Railway Association's decision on the question as to the necessity for this distinction is expressed as follows: "Where automatic block system rules are in effect a special marker of some distinctive character should be applied at the stop signal." On a number of roads a marker light is attached to each of the automatic block signals and is so placed on the upright post or mast that it is diagonally below and to the left of the light of the signal. This marker light is red. At interlocking plants, if there are two lights on the same mast, these are in a vertical line. Some roads which do not use the marker lights on automatic signals employ a number plate, and in some cases even go so far as to illuminate the number plate at night. When a signal is out of order and is temporarily taken out of service in order that it may be repaired, the number plate is turned up so that it does not show the number of the signal, which is a sign that the signal is out of service.

In line with the principle that any failure of a signal to operate or to give its indications should be on the side of safety, the rule is provided that absence of a signal from a place where it is usually displayed is to be considered a signal to stop. Thus, in the case of the signal which is out of

service, it is to be treated as a "stop and proceed" signal, and the absence of a light where one was usually displayed on an automatic signal would be treated in the same manner.

In the automatic block system arrangements are made so that the opening of a switch, as where there is an entrance to a side track or passing track, will interrupt the track circuit and put at stop the signals at each end of the block on single track, and at the entrance to the block on double track. The track circuit is carried past the switch point and on to the diverging track to a point at such a distance from the switch that if a train were standing on any part of the track circuit it would interfere with the passing of a train on the main track. This provides for protection against "fouling," or running afoul of, the main line. If a train runs into a side track and does not go far enough from the main track to avoid fouling it, the signals governing the block will remain in the stop position, even though the switch may be closed and in proper position for movements on the main line. The end of this fouling protection is always indicated by insulated rail joints, and sometimes is also marked by a derail, which is connected with the switch stand in such a way that the derail is in position to let the train pass only when the switch is open for a movement from the main line to the siding or from the siding to the main line. The derail is set to force a train off the track when the switch is set for movements on the main line. If a train should be waiting to get out of a siding which has no derail,

and the wheels of the engine should be standing even a few feet within the track circuit, this would operate to put the signals at the entrance end of the block,—or ends, if on single track,—at stop. If on double track, the train using the block would have to proceed cautiously through it, and on single track would have to flag through it. It is thus necessary for engineers to watch carefully the ends of these fouling sections at passing tracks, and, when they back in to let a train pass, or when they are using the siding for any purpose whatever, to take care to keep their engine or way-car wheels out of the fouling circuit to avoid causing unnecessary and serious delay.

With respect to the principal signals:

The manner of indication may be:

- visual;
- audible; or
- visual and audible.

The means of operating may be:

- manual;
- mechanical, as:
  - electric;
  - pneumatic; or
  - electro-pneumatic; or
- manual and mechanical, as:
  - semi-automatic.

The kinds of signals are:

- signals that are not fixed signals, as:
  - visual, used principally, except fusees and markers, to convey information to train;
  - flags.

lamps;
fusees; and
movements of hands, flags, lamps, etc.;
audible (used principally, except torpedoes, to convey information, from train to persons not on it):
whistles;
bells; and
torpedoes;
fixed signals, as:
manually operated;
visual:
semaphore signals, as:
train order;
station; and
interlocking; and
disc signals, as:
train order; and
station;
mechanically operated:
visual:
semaphore signals, as:
automatic; and
disc signals, as:
automatic;
manually and mechanically operated, as:
visual:
semaphore signals, as:
semi-automatic; and
disc signals, as:
semi-automatic.

Signals are placed as follows:

fixed
  visual: at
    stations;
    switches;
    interlocking plants;
    automatic signal locations;
    points of danger, as:
      drawbridges;
not fixed
  visual: at
    any point where speed or right to run at speed is to be restricted;
    any danger point; or
    any point where information as to the conduct of his train by an engineman must be conveyed to him;
  audible: at
    any point of danger; or
    any point where warning of approach of train is necessary.

Interlocking plants present many features of special interest to trainmen. These plants are built at crossings, junctions, yard entrances, stations, crossover layouts, and terminals to facilitate and protect train movements over any of the tracks connected with these situations. As a rule there is a signal for every route through every interlocking plant. This signal may not be a high signal in every case, and it may not indicate the particular route which is to be taken. If it is a high signal, however, it usually does tell which track the movement is to go to; but if it is a dwarf signal — a signal placed close to the ground, and

generally at or near the location of a high signal — it usually only gives authority to proceed, without conveying any information as to where the train is to go. The high signals, governing as they do the high-speed movements, must necessarily convey some more definite information than those governing only low-speed movements.

It is the usual practice to place a derail at the foot of nearly every high signal, especially at crossing and junction plants. This is to prevent disastrous consequences as a result of overrunning a stop signal. If an engineer were to overrun a stop signal at high speed, at a crossing of two tracks, he would probably be unable to stop until part of his train, at least, had reached the crossing, in which case he would be liable to be run into by the train for which the route was set up and which had the right to proceed over the crossing. To prevent such a contingency the track is opened at the point of the derail location so that if a stop signal is overrun the train will be turned off the rails on to the ties, and generally will come to a quick stop at a point short of the danger point.

Some roads have abolished the use of derails at interlocking plants, as, when the rules are carefully and conscientiously regarded, cases of overrunning the stop signals are very rare, and, when they do occur, the damage done by derailments is often more serious than would have resulted from the overrunning of the stop signal. This is true where the overrunning is done at such a low speed as would not let the train reach the crossing, so

that, even though it did pass the signal, no disaster would result. Derails have also been abolished in connection with terminal and other large interlocking layouts, for convenience, and without reducing the safety of these plants; but their use in connection with smaller interlocking plants is general.

Interlocking is so designed that the signals for more than one route over a conflicting point cannot be given at the same time. It is impossible to pull the levers which move the switches or signals in one route when a conflicting route has been set up. The mechanism by which this conflict of lever movements is prevented is the real interlocking, and it comprises an arrangement of rods and bars and other mechanical connections between levers, which defies even the efforts of a strong man to move the levers from their positions except at the proper time.

The distant signal is used to govern the approach to interlocking signals. It has been difficult to regulate the use of the distant signal to a satisfactory extent, for the reason that, in case an engineman should be approaching an interlocking plant and should pass a distant signal at caution, and after he had passed it the condition which required it to be at caution should be eliminated, the towerman, in order to avoid delay, would put the home signal at clear before the engine reached it, and the engineer would then lose the effect of his caution signal. In other words, it would have meant nothing to him, and would have been in the nature of a false caution signal. The temptation

then would be strong to treat the next caution signal as a false caution, i. e., as not meaning what it said. This has been done so many times that the problem of making the distant signal in the caution position always relate to the home signal not only as it was, but also as it will be at the time it is reached by the engineman, has been solved in a number of ways. Matters are now in such condition with respect to it that the assumption that a distant signal in the caution position is anything else than a true caution signal is unwarranted. The safest course to pursue when encountering a distant signal in the caution position is to proceed with caution. To pass the caution signal without heeding its injunction is no more likely to be lightly regarded by the operating heads of a road than to overrun a stop signal.

At interlocking plants the means of operation may be:

manual, (or mechanical);
electric;
pneumatic;
electro-pneumatic; **or**
electro-mechanical.

Since signals first began to be used on railways it has been the general idea among travelers, and to a great extent among railway officers themselves, that signals are nothing more than a means of insuring greater safety for trains and passengers. But on certain roads it became noticeable soon after signals were installed that freight trains also profited by the protection which the signals gave to the train movements,— profited to

such an extent that claims on account of damaged freight were greatly reduced. This effected a saving which set railway officers to thinking about the real usefulness of signals. It seemed that the safety precautions which had been installed at such large expense for the purpose of reducing the number of accidents, could be made to increase the earnings of the road in a number of ways. The subject was investigated and it was discovered that signals properly installed will increase materially not only the safety but also the facility of handling trains on almost any kind of track and in any situation, and at the same time reduce the expense incident thereto. With the growing appreciation of this additional utility of signals there has come a rapid development of the mechanisms by which the signals are moved and controlled, and of the rules and practices which govern their application to different kinds of track.

Practically all of the great trunk lines are protected throughout their lengths by signals, and most of them on which fast passenger traffic and heavy freight traffic require to be handled are completely equipped with automatic block signals. So important has the economical value of signaling become that it is no longer necessary on roads where traffic is heavy, to urge or require through the medium of governmental bodies or state commissions the installations of signals. Indeed, so necessary is the increase in earnings which they bring about by enhancing the facility of operation and reducing its expense, that complete signaling systems are often installed on new track for the

purpose of avoiding congestion of traffic which will exist only at some future time.

It is easily understood that if trains can be run closer to each other with entire safety on a given piece of track, more of them can be running at the same time. Inasmuch as the only thing a railway has to sell is transportation, which involves the running of trains, it is self evident that the more trains that are run, the more transportation there will be sold and the more profitable will the operation of the road prove to be. Signaling, therefore, by enabling a larger number of trains to be operated in safety on a given division or part of a road, increases the earnings very materially. Block signaling, and especially automatic block signaling, is more effective as a money saver in this way than in any other. But there are other economies to be effected by the proper kind of signaling which are too important to be overlooked. One of these is the reduction in the overtime of trainmen,— something which is profitable alike to the road and its employes. If the crew of a freight train can finish its run in a certain number of hours as a minimum the trainmen would much rather do it in that amount of time than to be kept out on the road for from two to three hours to a half day longer. Yet where automatic block signals are not used, that very often happens. A freight train is ordered to meet an opposing passenger or another freight at a certain point. When that point is reached the opposing train is reported late. The trainmen, knowing the nature of the protection that the automatic sig-

nals give them can start out to the next station, and if they are unable to reach it within the margin of time which they have, there will still be no danger of a collision as the automatic signal will indicate to the opposing train that they are trying to make the station ahead. Usually the crew of the freight train can estimate very accurately how far they can go and still avoid delaying the opposing train, and by taking advantage of every opportunity to avail themselves of the protection of the automatic signals between stations they can often gain two or three, or sometimes even more, stations and two or three hours of time,— which would have been lost if they had had to wait at the first station for the passing train.

In single-track operation the signals are placed so as to govern movements into and out of passing tracks, and in three-position signaling when the signals at each end of the block are in the stop position the next signal behind each of these is in the caution position. This combination of conditions is often used to good advantage by trainmen who are waiting on a siding for a train to overtake and pass them. The signals on the main line in the opposite direction assume the clear position as soon as the train which has to wait has cleared the main track and is entirely on the siding. The signals for the direction in which the train is going are clear also, while the train is on the siding. If the crew of the train, which is waiting should notice the automatic block signal nearest to the end of the passing track and governing movements in the direction opposite to that

in which they intend to proceed, and should see that signal assume the caution position they would know that the train which was to overtake and pass them had entered the next block behind them. As the blocks on single track generally average about a mile in length they are thus enabled to determine how far the following train is behind them.

If, however, this signal governing movements in the opposite direction does not assume the caution position the crew of the waiting train are certain that the train which is to overtake and pass them is more than two miles behind them, and if their train is capable of making about the same speed as the following train they may be able to start out and beat it to the next station and get into the clear at that station before the following train can close up the distance between them to the length of one block.

Another way in which automatic block signals are useful in saving expense is in connection with the firing of locomotives as in the case of a train waiting on a single track siding for another train to pass. The fireman ordinarily would have to keep his fire at such a point that he would be ready to pull out as soon as the opposing train clears the switch. This is an expensive proceeding in a good many cases, for the waiting train has no means of knowing how long it will be before the opposing train will arrive. So the fire has to be kept going every minute as if the train were to proceed the next minute. If the track is protected by automatic block signals, however, the fireman

waiting on a side track can "damp" his fire until he sees the nearest signal for the opposite direction assume the caution position if the train is a following train that is to pass him, or the signal immediately in front of him assume the caution position if it is an opposing train. This will give him time to fire up and get ready to leave before the train clears the switch and will enable him to save considerable fuel.

Signaling, if installed properly on a single track line, will enable so many more trains to be handled on that line that double tracking may be postponed for an indefinite time. Again, on double-track the laying of a third track may be deferred. So much advantage is taken of the possibilities of signaling on double track, that a number of roads operate each of the tracks as a single track line, using the other track for the purpose of running one train around another one, or letting a fast train pass a slow one either in the same or the opposite direction. This method of operating is not used, however, under automatic block signals as a rule, for the reason that movements are often made on each of the tracks against the current of traffic, i. e., in the direction opposite to the normal movement of traffic on that track, and if they were to be made under automatic block signals, signals for each direction on each track would be required. This would be impracticable and too expensive, especially when a double track line may be used as two single tracks successfully and economically without the use of automatic signals.

In cases where such use is made of a double track line the track is usually divided into blocks from three to five miles in length. An interlocking plant is provided to control a crossover layout at each end of each block, and it is at these interlocking plants that the crossover movements by which one train is made to run around or past another are brought about. Three tracks are often operated as four, the middle track being used for movements in one direction for part of the time and for movements in the other direction for another part. Thus at a big city terminal, in the early morning hours when there are a large number of suburban trains and through trains pouring their passengers into the city, a three-track entrance to a terminal station is really a double track in and a single track out. In the evening, however, when a very large percentage of the passenger traffic is away from the city, the three tracks are in effect a double track out and a single track in. It is more practicable to place signals to govern movements in both directions on the middle track of a three-track line than to place them so as to govern movements in both directions on each track of a double-track line. This is often done, especially in connection with handling of suburban traffic in large cities.

The proper location of signals has been referred to several times as being of considerable importance. It is of the utmost importance if the signals are to prove the most effective in increasing safety and reducing expense. If signals are improperly located they not only fail to fulfill

their purpose but also actually impair the facility of handling traffic. For example, if blocks are made too long on a track where the traffic is fast and heavy a following train will often have to wait a needless interval of time and be delayed on account of the time it takes the preceding train to pass through the long block.

The proper location of signals involves the careful study of train movements both as to their present number and importance and as to future possibilities, and the arrangement of the signals to take care of these to the best advantage. Blocks must be neither too long nor too short. The signals must be placed at all points with careful regard as to whether or not they can be seen from the proper distance by approaching enginemen. On account of the necessity of thus being seen they are not placed at the far ends of the curves, but are always located at the near ends so that an uninterrupted view of their indications may be had from the straight approach to the curve. Signals are always placed with careful reference to grades. They are not usually located on heavy up grades where they might require a long freight train to stop just after it had been started with great difficulty on the level approach to the grade. Neither are they usually placed at points where the grade changes, on account of the fact that sudden stops which signals sometimes require, if made at these points often cause such strains on the apparatus connecting the cars, that considerable damage is done to the equipment.

The approaches to stations are usually well protected with signals. In many cases these are operated automatically in part, i. e., they are partly under the control of the stationmen or the operators. In these cases the signals are electrically connected and controlled from the station in addition to having track circuit control operated from the track in and adjacent to the station.

In other cases the station protection signals are mechanically connected, as by pipes or wires, to the levers or the switchstands at the switches which govern the entrances to side tracks, passing tracks and house tracks. These signals stand normally clear, and have to be pulled to the stop position before a switch can be thrown to let a train into the siding to the passing track. When these signals are in the stop position they have the same meanings as other stop signals, and serve to prevent the train which is working at the station from interfering with or being interfered with by, another train scheduled to pass straight through the station. The work of switching in and about stations is sometimes done on a narrow margin of time, and occasionally movements are finished up on some other train's time than the one which is doing the work. The station protection signals serve to prevent accidents in case such a work train or way freight fails to get out of the way. After the train has completed its work at the station and is ready to proceed, it has to back out on to the main line and restore the switch and its signals to their normal position, which is clear in the case of the signals, before it can pro-

ceed to the next station. It has been ascertained as the result of inspections and investigations of railway accidents that a large majority of them occur at and near stations. Station protection by means of signals is thus an important consideration.

It is usually understood that in operating under the automatic block signal system there may arise conditions in which it would not be actually dangerous for a stop signal to be overrun without the train having come to a full stop at the signal. The engineer, seeing a stop signal, does not know whether it has assumed that position on account of a train in the block ahead, or whether there is something wrong with the signal system. This is, as has been mentioned, because all signal systems and signals are designed on the principle that every failure of any kind shall be on the side of safety insofar as possible. After an engineman has encountered two or three stop signals and has brought his train to a full stop each time and then gone through the block carefully without finding any reason for having to stop, it is a temptation to regard the block signals and the rules as unnecessarily severe in their requirements, and to do no more than slow down at a block signal. It is possible that such disobedience may not have any serious results, but the chances are always that it will, which is the reason for the rule forbidding it. In fact so many disasters have followed such failures to give proper respect to the rules and the signals that it is exceedingly

desirable that the letter and spirit of the rules and indications be lived up to in every particular.

In order that this may be done, and that the importance of it may be fully impressed upon enginemen for their own benefit as well as that of the road, "surprise tests" have been inaugurated. These are designed to test the quality of obedience which enginemen give to the indications of signals. The trainmaster, or assistant superintendent, or sometimes even the superintendent together with several of the signalmen go to some point where they are least expected to be and create conditions which lead to the display of a stop or caution signal. They put out a light, or put a piece of wire across the rails, which has the same effect as a train in the block. Then, from a hiding place near by, they observe how the engineman conducts himself with reference to the indication. Insofar as the enginemen are concerned these signals are no different from any others, and if they stop or slow down, as the signal may require, and obey the rules in every particular it is fair to assume that they will do the same with respect to signals which may represent an actually dangerous condition. Surprise tests are made at frequent and irregular intervals, and as a rule, they indicate a very high degree of efficiency on the part of the enginemen, and show a satisfactory observance of signals. On some roads tests are constantly being made. Hardly a day or night passes without some indication somewhere having been tampered with. Yet the percentage of cases

where signals are obeyed implicitly is usually between 99 and 100.

The surprise test is growing in popularity among railway officers, as it furnishes the best possible check on the safety value of the signals. It was formerly regarded by trainmen as unfair and unnecessary, but that attitude has given place to one of commendation. And now that it has been conclusively demonstrated that surprise tests do so much for trainmen and so much for the road on which they are made, they are rather welcome than otherwise, as additional safety precautions.

The problem of devising mechanisms to prevent the overrunning of stop signals by automatically shutting off the steam, or electric current in case the train is electrically operated, and at the same time applying the air brakes, has received the attention of inventors for many years. Some systems which have met with fair success have been evolved, and some trial installations which have operated satisfactorily have been made.

Automatic stops of this kind are used successfully on elevated and underground railways in practically all of the large cities, and, in modified forms, on a number of electric interurban railways. Their general use, however, on steam roads is not governed by the same conditions that have permitted them to operate successfully in special cases as, for example, the subway in New York. It has not yet been proved that any system has reached the point of infallibility that will have to be reached before railways will be justified in

adopting the automatic stop. Nor has it been determined whether or not the automatic stop would be a good thing to adopt, even if there were a perfect device available.

It has been claimed that automatic stops will relieve enginemen and make their work safer, but this claim has not been clearly demonstrated, and it is believed by many is not capable of being proved, especially in view of the fact that there need be no accidents of the kind that the automatic stop would prevent if the rules, which are entirely adequate, and the signals, which are also entirely adequate, are implicitly obeyed. Automatic stops would not prevent all kinds of accidents. In the nature of things they could not do any more than enforce the indication of the signal, and if this indication should happen to be wrong, that is if a clear signal should happen to be given when a stop signal is required, the automatic stop would not be any more effective than the signal is now. The solution of the problem will be accomplished undoubtedly by an evolution in ideas and practice similar to that evolution which has resulted in the development of present day signaling systems from the primitive and inadequate devices of fifty or seventy-five years ago.

NOTE.—All the matter in this book relating to signals has been revised and edited by Mr. A. D. Cloud, a well known and authoritative writer on such matters.

CHAPTER XIII.

TRACK SIGNALS.

An essential thing in connection with signals of this character is that they should be simple in their working and certain to operate as contemplated. They must also be plain in their import: unmistakable object lessons, so to speak, and clearly discernible at a distance from a rapidly moving train, under conditions in many cases not favorable to a perfectly clear view. They must be simple in their operation because worked by men not skilled in scientific ideas or appliances. They must be certain in their operation, for if not, they may hurry a train to destruction where it was intended to guard it against harm.

The signal forms in use by railroads are the outgrowth of practical experiments extending over the whole period of railroad operations, but it is not at all probable that ingenuity has been exhausted in this direction. Better devices will be evolved with continued experience and increased ability to pay for them.

While they seem to us to be all they should be, they are like a plant that appears perfect in its wide-spreading leaves, its beauty of color and form, and perfection of development, when suddenly a bud will be formed and out of it bloom

forth a beautiful wide-spreading flower. This is the perfected fruit of a growth we have been watching and had thought to be perfect. And so it is with railway devices. They have their periods of growth and sudden expansion like the final development of the flower.

The track signals of railways are an unintelligible jumble of colors to the looker-on merely, but in their grouping and significance, convey to those interested information as well understood as speech, and much more quick of comprehension. To be sure, the language is a limited one, but the needs are limited. It is sufficient to meet the requirements of the situation.

There are many different patterns of signals used; many different forms found on the same railroad, especially if it is an extended one. They arrange themselves (or should) according to the needs of traffic and its profitableness, but when like conditions of traffic exist on different roads there is in general no concerted belief that one system so overshadows all others as to warrant the expense of its immediate introduction and the annoyance that the removal of the old would involve. Consequently old forms continue in use more or less just as those now being perfected (and the most perfect of their kind), will continue to be used long after other and better patterns have been evolved. Ignorance and prejudice have more or less voice in matters of this kind, but practicability in the main governs just as it does in the economic affairs of families and other matters of every day life. In the first

place, railways must have the means to put in new appliances, and supposing they have the means, the betterments must be such as to justify practical men in making a change.

Those who manage railways are like common sense housewives. Good judgment governs them in everything they do. Oftentimes they do not advance as rapidly as theorists think they should, but this is to their credit: an evidence of their conservatism and wisdom.

Not only are signals widely different as regards the conception men have of them, but they differ widely in the extent of their use where the same patterns or forms are employed. It depends on the business of a line and the wisdom and adaptability of those in charge. Some of the patterns portrayed herewith are those of a road with a good business and paying a reasonable dividend on its stock, and having a small surplus left over.

Generally speaking, the advanced ideas of those in charge of railroads, coupled with the needs of the situation, may be depended upon to enforce track signals in conformity with what is best. If the road has a medium business, medium progress will have been made; if it has a great and highly productive business, every known method will be in use to guard trains and accelerate their movements. Adjustments of this nature come about in a natural way; supply follows demand. There is no call for external pressure being brought to bear.

The following colored diagrams illustrate

forms of lower quadrant interlocking and block signaling. The colors are growing in popular acceptance and are more or less generally used. However, color, for purposes of illustration merely, is not material. If white instead of green is the sign of safety, then white may be substituted for the green. It has always been the standard and its use for such purpose was at one time universal, but is so no longer. The question of track signals is referred to at length elsewhere herein, in connection with other matters germane thereto. I will not, therefore, pursue the subject further here.

Interlocking.

The colored diagrams given herewith illustrate semaphore forms of signals used in connection with interlocking. The standard regulations of the American Railway Association require that the distant and home signals shall be placed either over or upon the right of and adjoining the track they are intended to govern. The blades must be displayed to the right of the signal mast as seen from the approaching train. Signals of this nature may be displayed on the same support for one or two tracks, but not for three or more.

Distant Signal.

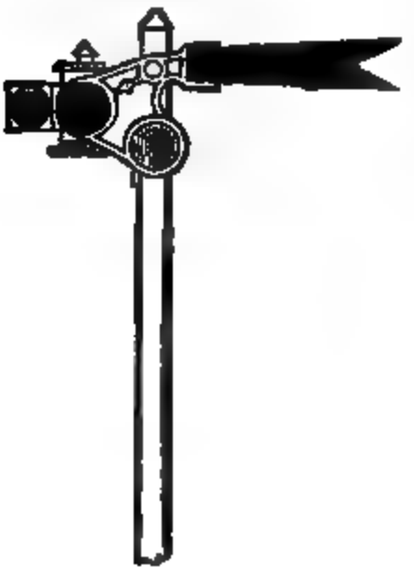

"Caution. Run slow."

Distant Signal.

"Clear. Proceed."

This signal is required to be placed 1,500 feet to a half mile in advance of the home signal, that is, in position to be reached first by an approaching train.

Home Signal.

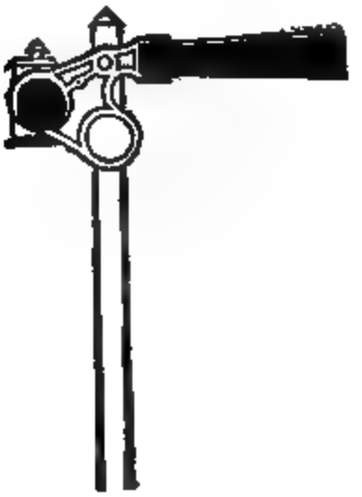

"Danger. Stop."

Home Signal.

"Clear. Proceed."

This signal is used at interlocking plants and is placed 55 feet from its derail or switch.

Dwarf Signal.

"Danger. Stop."

Dwarf Signal.

"Clear. Proceed."

This signal usually is not over two or three feet high and is used at interlocking plants.

Two-arm Home Signal.

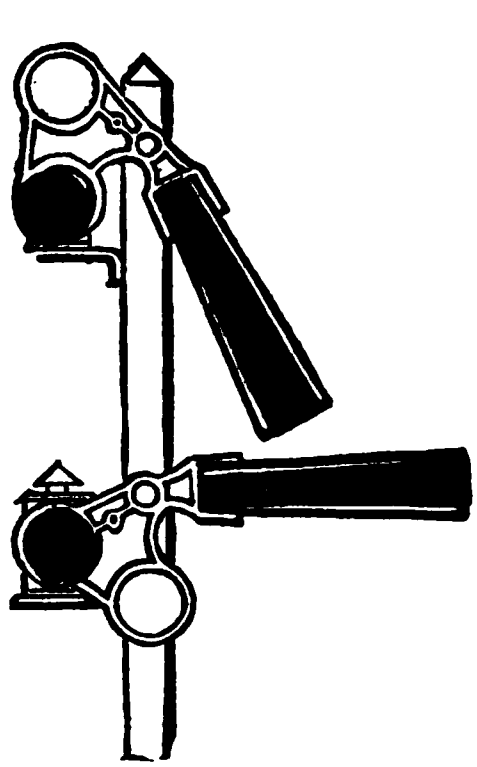

"Main route clear. Proceed."

Two-arm Home Signal.

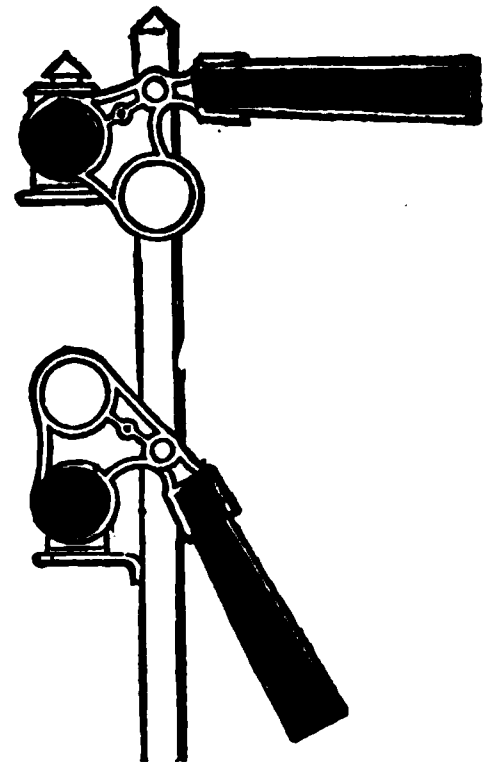

"Diverging route clear. Proceed."

This signal is used at interlocking plants, each arm governing a particular route.

AUTOMATIC BLOCK SIGNALS; SEMAPHORE FORM.

The following colored diagrams portray signals used in connection with the semaphore automatic block signal. These signals are referred to in another part of this volume.

The signals are placed, according to the American standard, either over or upon the right of and adjoining the track governed. The blades are displayed to the right of the signal mast, as seen from the approaching train. A mast may support signals for one or two tracks. The upper blade indicates the condition of the block immediately ahead; the lower blade serves as a distant or caution signal for the second block in advance.

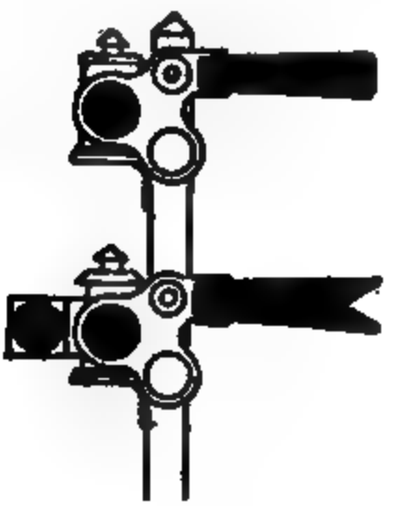

"Danger. Stop." "Caution. Run slow."

Home and distant signals on the same mast. The indications are given in two positions in the lower right-hand quadrant. This type provides for a green marker light to distinguish the distant signal. Usually only one light is provided for this signal.

"Clear. Proceed."

Home and distant signals on the same mast. The indications are given in two positions in the lower right-hand quadrant. This type provides for a green marker light to distinguish the distant signal. Usually only one light is provided for this signal.

AUTOMATIC BLOCK SIGNALS; DISC FORM.

The following colored diagrams represent signals used in connection with the disc automatic block signal. This form of signal is described elsewhere herein. The signal, according to the American standard, is located on the right of and adjoining the track governed.

Distant Block Signal.

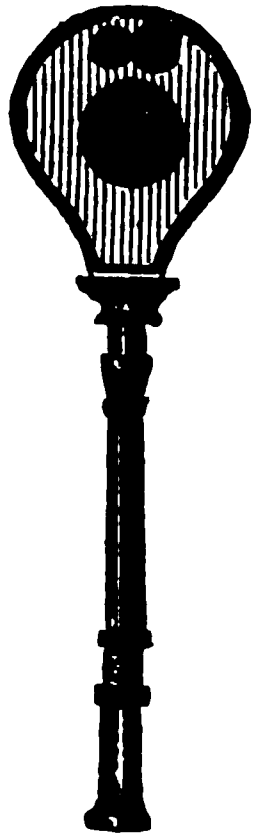

"Caution. Run Slow."

Distant Block Signal.

"Clear. Proceed."

Block Signal.

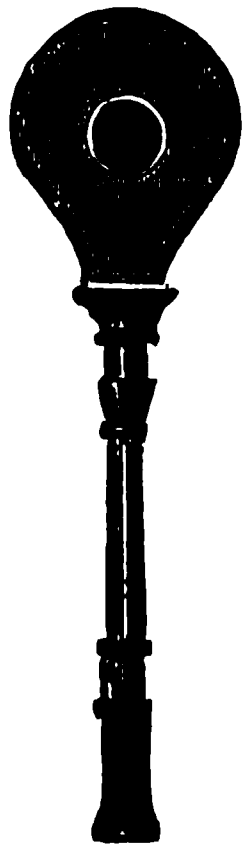

"Danger. Stop."

Block Signal.

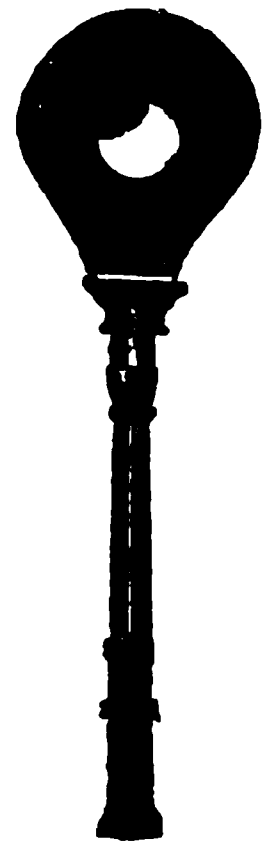

"Clear. Proceed."

CHAPTER XIV.

GROWTH AND VALUE OF TRAIN RULES.

In considering the subject of train rules, one of the first questions that suggests itself is, Are uniform regulations practicable? The answer is that among men trained under particular systems, who possess the strong individuality that characterizes railroad officers, difficulty will always be experienced in securing acceptance of the ideas of others. Where the methods of a railroad are peculiar and such peculiarity possesses no advantages, but, on the contrary, invites disaster, they should give place to uniformity. The desirability of this in connection with train rules has been a subject of discussion for many years, and a code has been adopted in conformity therewith which railroads have been asked to subscribe to as far as practicable. Many companies have done this, partially, at least, reserving the right, however, to make any change they think fit at any time, without reference to others. Many valuable rules have been left out of the code because of the indisposition of particular companies to adopt them. This indisposition is the result, partly of dissimilar needs and partly of an indisposition to

make sacrifices to gain something not esteemed essential.

The same necessity does not exist on every railroad for particular rules. Moreover, a rule that may be desirable in one case may not be so in another. Hence the difficulty of prevailing upon railroads to conform to a particular code in its entirety. It is not probable that the difficulty will ever be entirely surmounted. Perfect uniformity is impracticable, and therefore improbable. But that which is best and generally valuable will be adopted. Possibility of accidents growing out of diversity of practice will be guarded against, while enough freedom will be left to individuals to stimulate further thought.

While practical people do not believe in the desirability of uniform methods of business, any more than they believe in uniformity of experience and intelligence, nevertheless they believe that in merely mechanical matters uniformity may oftentimes be adopted without sacrificing anything of value. This is true in regard to many details having no special significance. Thus, it is true of a feature of the time table of railroads that has no local bearing, namely, the signs that are used. These should mean the same thing everywhere. Thus, *the train runs daily; †the train runs daily, except Sunday; ‡ daily, except Saturday; ¶ daily, except Monday; § Sundays only; || the train stops for meals.

In promulgating train rules no sufficient effort is made in many cases to explain the reasons underlying them; no attempt is made to place

the trainman who has to carry them out on a plane with the official who made them. This is a mistake, as it will never be possible to operate trains with the highest possible efficiency so long as those in charge do not have as full a comprehension of the rules as the person making them. The subject is an important one and growing more so each day, as the service grows in needs and complications. In some of my books I have referred to the financial affairs of railroads and the rules and regulations governing the collection, care and disbursement of money and the economical purchase, care and use of material. These references are in every case accompanied with explanations that enable the reader to look at the subject from the standpoint of the manager. He can thus not only understand clearly a particular matter, but questions collateral thereto. A similar practice can be observed to advantage in many things connected with the rules and regulations governing the movement of trains. Much that I have to say in this book has this object in view. Such explanatory matter appears unnecessary to experts, but it must be remembered that rules and regulations are most valuable to beginners. To such persons explanatory matter, even of the most simple and rudimentary character, is of the greatest possible value. Rules are not promulgated for the few, but for the great multitude who require guidance.

The disposition of those connected with the train service to give the rules governing them

more thoughtful consideration is apparent with each year's experience. But this is not esteemed enough by some managers, and accordingly they require that all connected with the train service shall be examined periodically, as to general fitness and specific knowledge. This examination is not confined to new men, but applies to all. It is based upon a belief that it is necessary, and moreover, if not voluntarily carried out by the railroad companies that it will be arbitrarily enforced by. the government; that one great railroad accident brought about through the manifest ignorance of trainmen in regard to necessary rules and regulations will precipitate action by the government.

In the absence of specific examinations of this nature, it has been suggested that a particular person shall be designated by each company whose duty it shall be to answer questions propounded to him by trainmen in regard to rules and regulations. Thoughtlessness and indifference on the part of some and timidity and pride upon the part of others, it is believed, will prevent a general understanding of the rules unless adequate provision is made to overcome the difficulty. If explanation could be vouchsafed the proud and the timid without shocking their sensibilities, they would gladly accept it.* With the

---

* Quite a number of railroad companies place at convenient points on their lines what they call a "question box." Anyone wishing to ask a question writes it out and drops it into the box without signing his name. The reply is posted on the bulletin board, where all, including, of course, the person who made the inquiry, can see it.

careless and indifferent more forcible measures are necessary.

Not only must rules be adequate and thoroughly understood by those they govern, but they must be obeyed. The emergency suggests inspection and supervision. Many of the departments of the service provide supervisors, whose duty it is to see that needed rules and regulations are adopted and carried out. The same practice will be found to work well in connection with the train service. High efficiency is impossible otherwise. Men will not confess their ignorance unasked; indeed, may not know that they are ignorant. There must consequently be someone whose duty it is to seek them out.

The rules and regulations governing the movement of trains are printed and supplied to every person interested. They are simply and clearly stated. If a rule is transgressed, it should be assumed that the offense was conscious. Ignorance cannot be assumed in so vital a matter. To do so is to destroy the force of a code and weaken the discipline of the force.

Moreover, if a rule is embodied in the manual, attention should not be called to it outside of or apart from the manual itself. To do so is to weaken all other rules.* The manual should be enforced in its entirety.

Employes do not always attach the same significance to specific rules. This is also true of

---

* It has not been a startling nor unusual thing in railway practice to see circulars issued calling attention to a rule in the manual and asking its enforcement.

signals. Acquaintance with the everyday working of trains teaches that allowance must be made for ignorance, stupidity and thoughtlessness, and trainmen strive constantly to protect themselves and their trains from the fatal effects thereof. Thus, the engineer does not depend implicitly upon the protection the time card affords him. Will the rules be carried out? he constantly asks himself. Doubtless; anyway he ventures no comments. Outwardly, he is unconcerned, but as he proceeds on his way he scrutinizes the road before him with an intensity that never wearies. His anxiety is not occasioned by fear for his own safety, though that has its influence, but is the result of knowledge, born of experience, that blind adherence may cost him his life and the lives of the people in his care, and who are as unconscious of danger as they are helpless to avert it. Oftentimes his watchfulness is of no avail; a sharp curve brings him face to face with an obstruction, an open switch, or may be a track torn up for repairs. Some necessary rule upon which his safety depends has been disregarded. A train perhaps that should have waited has gone on its way, confident of making a desired siding, but high winds, a slippery track, or an engine that will not make steam have prevented, and so, suddenly, from out the obscurity it emerges to meet the train that is proceeding on its way under the rights accorded it by the schedule.

That disasters of this character are not of more frequent occurrence is largely attributable to the

watchfulness of trainmen. They know that lack of care may not only cost the offender his life but involve many innocent lives. And so there grows up in their minds an intense conservatism. They strive literally to comply with every rule, risking nothing, but their obedience is attended with unceasing watchfulness. To this latter and their desire to adhere to established rules, travelers owe their safety.

The more we scrutinize the rules of different roads, the more we are surprised at their lack of uniformity. Many of the differences appear material; others, again, are manifestly differences of form only. Oftentimes we can trace, or think we can, in the regulations the peculiar traits of those who formulated them. Thus, the rules of one company are minute and exacting, while those of another trust more to the discretion of employes. Much is said in favor of each system; under one it is claimed employes act automatically; under the other more zealously, but less effectively. The first named system, a critic may point out, is the best for the company for the time being, the last named most advantageous to the growth of the men.

We must be familiar with properties to enable us to understand the reason for many differences that exist. Thus, upon one line trains going south are entitled to the road for a certain number of minutes after the time fixed in the table for meeting opposite trains, the trains going north being required to keep out of their way meanwhile. Upon a neighboring road trains

going north will be the ones that are favored. The distinction is based on the importance of trains, but it does not require a vivid imagination to picture the possible consequences that would follow a mistake as to the rights possessed by the respective trains. Such a mistake, however unlikely, is rendered barely possible, it has been claimed, by the transfer of employes that is all the time going on between railroads.

A noticeable difference in rules is that affecting construction and other working trains. Thus, one company will require such trains to keep ten minutes out of the way of freight trains. These trains require many men in their operation, and the loss to a company through enforced idleness of this kind amounts yearly to a large sum. A neighboring company, keeping this fact in mind, gives its working trains permission to continue at work (protected by signals) until the approaching freight train is in sight. Upon the last named road its practice might be practicable while upon the other it might not be. Business situations in the main govern such matters, though not always.

The margin of time allowed trains of a superior class (which time must not be used by inferior trains) is not uniform upon different roads. One company will require freight trains to be upon a siding twenty minutes in advance of the time a train of superior grade is due; another line, fifteen minutes; another line, ten minutes. The object of each is to strike a safe mean. Different

conditions render differences possible and necessary.

A study of the rules and regulations of railways discloses strenuous efforts to make the most of every circumstance. That these efforts are sometimes ill directed is true, but such failures teach a lesson and are, therefore, in the end not wholly lost. On one road, to illustrate, detached engines are required to precede regular trains. Another company, with an eye to the saving that may be effected, requires such engines, when accompanying freight trains, to follow rather than precede, the object being to make them assist the loaded train. However, it may be said in connection with such differences that assistance may be valuable in one instance and not in the other.

Not the least surprising of the variations that exist are those having reference to the manner of conducting business upon double track roads. While it seems apparent to Americans that vehicles on the public highway should turn to the left in passing, it seems equally clear to them that upon a railway where danger of collison does not exist, trains should take the right-hand track. However, the regulations of many lines require trains to run on the left-hand track; others require them to take the right-hand track. There are reasons for these differences at the present time (though perhaps not in the beginning), one of the most weighty of which is the fact that custom has made current practices the best to follow. Not only is the force schooled in such practice, but many of the physical features of the line

have been based on it and cannot be easily or cheaply adapted to any other.

A diversity somewhat similar to that existing in train rules is found in the telegraph service. Thus, upon the lines of one company the signal "7" flying along the wire closes every key and silences every operator. It is a magic number and hushes all disputes. It may mean life and death. At any rate, it is a warning to clear the line a signal that the waiting message must take precedence of everything else. On another line the signal in question possesses no significance whatever, and its repetition would never still the struggle that is forever going on among operators for the circuit. Upon another line the cabalistic sign "9" hushes everyone. It is the signal of the executive, and woe to the unfortunate who ventures to break in upon its prerogatives. Elsewhere this number has no meaning, and its repetition would only excite profanity. Upon every line ingenious means are adopted to save time and labor. Thus, letters are made to convey special information or lengthy interrogatories. When letters have been exhausted, numerals are resorted to.

While the rules of no two railroad companies were alike at the start, no code contained every rule that possessed practical value. But the code of every company contained valuable hints and suggestions that might be profitably studied by others. I have never ceased to admire the practical wisdom and adaptability railway managers evinced in forming their train rules and regu-

lations. Each brought to the subject his quota of knowledge, sometimes wholly original, sometimes adaptive merely.* This last peculiarity was especially striking. Thus, one manager, who had given particular attention to claims, directed his subordinates in case of accident, to report, with other facts, the names of witnesses; other companies noted the provision and adopted it. Another manager, taking advantage of every doubt, warned employes that the company would not be responsible for accidents to them while coupling cars! Another manager would take a common rule and, by adding a clause, gave it a completeness it did not before possess. By and by the change would be generally noticed and adopted. One practical manager ordered his engineers not to exceed fifteen miles an hour, and pointed out that, running at that rate, they would pass seven telegraph poles a minute. Another manager invented a system peculiarly his own, whereby trainmen could signal each other in the event a train should break into more than two parts. Still another manager defined the rights possessed by extra trains in the absence of special orders, if they could not reach the meeting point without trespassing upon the time of trains going in the opposite direction. The instances I have cited are merely intended as illustrative of the originality of knowledge and

---

* I speak in the past tense because the methods that govern trains were, in the main, formulated in the early history of railroads, and the men who instituted them and put them in force have long since passed away, with but few exceptions.

diversity of experience evinced by managers (acting apart) in framing codes of rules governing the movement of trains. A volume would hardly be sufficient to point out the special regulations in force to-day suggested by the experiences and environment of different managers. Out of such experiences and conditions an effective code of train rules is being evolved. It is not yet complete. The way seems long and prosaic, but all the beneficent laws in existence that make life worth living have grown in the same simple, cumulative way.

CHAPTER XV.

TRAIN PHRASEOLOGY.

The nomenclature of trains is well understood by men in the service, in the localities where the peculiar idioms it takes on happen to be current, but to novices and the world at large it is an enigma, and, like all enigmas, must be explained in order to be understood.

Many of the phrases used by trainmen are adaptations. Many are evolved from the peculiarities of the service. While the vocabulary of trainmen is not as copious as that of sailors, many of their phrases are quite as enigmatical. Thus, when American trainmen speak of "flying switches" foreigners are puzzled. Nor are they more enlightened in regard to such things as "running switches," "shooting stations," "wild trains," "whistling posts," "taking side tracks," "making time," "clearing trains," "slipping engines," "setting switches," and so on.

The phraseology of the English roads is quite different from that of America, but not more intelligible to us than our form of speech is to Englishmen. How many railway men in America are there who know the meaning of "scotch

block,"* "sprag"† "trolley,"‡ "lay bye,"§ "lorry,"‖ "ganger,"¶ or "train staff"?** In England, as in the United States, the names of many things connected with railways had a significance half a century ago that they no longer possess.††

The great bulk of the phrases now used by trainmen in a country are well understood by its people, but many are intelligible only to those familiar with the peculiar vernacular of railway men. It is desirable that they should be understood at least by everyone in the service of railways. The list I give might be enlarged. It is constantly receiving new accessions. It is as follows:

Ahead of Time.—When a train reaches a place before it is due at such place, according to the

---

* A movable block laid across the track to prevent the movement of cars.

† A block fastened to a pivot near the end of a siding and laid across the siding when cars have been left in it, to prevent their being moved out accidentally.

‡ Car used by trackmen.

§ A side track.

‖ A flat car.

¶ The foreman in charge of section men.

** A staff used upon a single track road to indicate that a train has been granted the right to run over a particular section of line, as explained elsewhere herein.

†† "At the 'booking office' of an English road no booking is done. You merely say, to an unseen if not invisible person, through a small hole, 'First (or second) class, single (or return),' put down your money, receive your ticket and depart. But as there were booking offices for the stage coaches which used to run between all the towns and through nearly all of the villages of England, the term had become fixed in the minds and upon the lips of this nation of travelers. So it was with the guard and his name; and when the railway carriage supplanted, or rather drove out, the stage coach, the old names were given to the new things, and the continuity of life was not completely broken."—*Richard Grant White.*

schedule or special order under which it is running, it is said to be ahead of time.*

Behind Time.—When a train fails to reach a point at the time specified in the schedule or special order under which it is operated, it is said to be behind time.

Block System.—A system devised to facilitate business and protect trains. Under the block system the track of a road is divided into convenient sections called blocks.

Brake.—An apparatus attached to engines and cars for the purpose of bringing them under control, when occasion requires to lessen their speed or stop them when in motion. "A piece of mechanism for retarding or stopping motion by friction, as of a carriage or railway car, by the pressure of rubbers against the wheels."—*Webster.* The application of this power or friction to the wheels is described by the phrase "setting the brakes."

Cars.—Freight cars are called wagons in Great Britain; passenger cars are called coaches or carriages. In Europe the passenger car is quite generally divided into compartments, with entrances on the sides of the car. The compartments of first and second class carriages usually contain seats for eight, four on each side. The third-class car is occupied in common and is extremely plain. Formerly, there were no toilet facilities for any of the classes. They are now provided in many instances for the first class.

* It is a most imperative and obviously necessary rule that no train shall *leave* a station ahead of its schedule time.

While the compartments of this class are luxuriantly furnished, the facilities do not compare in comfort with the drawing room or chair car of America.

Classes of Trains.—"Regular," "Extra," "Special" and "Wild." *

Clearing a Train.—Keeping out of the way of a train; arriving at a meeting or passing point before the train to be cleared is due.

Closed Switch.—When a switch is "closed" the main track is then uninterrupted, i. e., not diverted.

Construction Train.—A train employed in the transportation of material used in connection with the improvement of the property of a railroad or the building of new lines. It is usually understood to mean trains engaged in hauling ballast, dirt, gravel, stone and timber, or engaged in removing earth from ditches and cuts. Trains occupied in the work last described are called ditching trains.

Drop off Flagman.—A man who gets off a train for the purpose of protecting its rear.

Extra Train.—A train not expressly provided for in the schedule.†

Flying Switch.—The disconnecting of a portion of a train while in motion, just before reaching a

---

* As a matter of fact, there are only two classes—regular and special. The last is, however, differently designated on different railroads.

† The term is not as common as formerly. It is now quite generally the practice when extra trains are run to incorporate them with trains provided for by the time table, as the first, second or third section, as the case may be. Extra passenger trains are more frequently called "specials" than "extras."

switch. The forward part of the disconnected train is then accelerating in speed so that it will reach and pass the switch in time for the person in charge thereof to divert the detached cars to another track.

Grade of Trains.—The grade of trains varies upon different roads, but it may be stated generally as follows: The four classes of passenger trains, limited, express, local and suburban; the three classes of freight trains—live stock, through and way; trains operated under special or telegraphic orders.

Holding a Train.—Holding a train by special order or under the provisions of the schedule, say until another train arrives or passes it.

Interlocking.—Tracks controlled from a common point, by means of levers, each switch and signal being locked so as to protect the track over which the train is passing. The term is fully explained elsewhere herein.

Keeping off the Time of a Train.—An order to a train not to obstruct the track nor attempt to occupy it as against another train.

Lost its Rights.—When a train has lost its rights under the schedule.

Lost Time.—The time that a train has lost according to its schedule. If a train is behind time it has "lost time."

Main Track.—The principal track or tracks of a road upon which trains are run.

Making Time.—A train running in accordance with the time allotted it in the schedule. When

a train is recovering time it has lost, it is said to be "making up time."

Meeting Point.—A point at which trains moving in opposite directions meet.

Movement of Trains by Telegraph.—The manipulation of trains from a central office through the medium of the telegraph. The substitution of special orders for the rights allotted under the schedule.

On Time.—A train conforming to the time specified in the schedule.

Open Switch.—When a switch is "open," the main track is connected with a subsidiary or collateral track.

Overshooting.—Running past a point or station.

Passing Place.—The place where a train is overtaken and passed by another train going in the same direction.*

Regular Train.—A train specifically named in the schedule.

Right to the Road.—The right of a train to occupy the main track at a particular time and place. to the exclusion of all other trains. In the absence of orders to the contrary, trains of an inferior grade are required to keep out of the way of trains of a superior grade. Thus, when a superior train is due according to the schedule, inferior trains must not occupy the main track.

Rights of a Train.—Rights that a train possesses as defined by the schedule, or special orders.

---

* If the trains are proceeding from opposite directions, the point where they pass each other is called the meeting place.

Running Against a Train.—When two trains are to meet at a certain point they are said to be running against each other.

Run Regardless.—The right a train has to run regardless of other trains, as "you will run from Ford Edward to Glens Falls regardless of train No. 9, keeping out of the way of all other regular trains."

Schedule.—See "Time Table."

Semaphore.—An apparatus or signal for conveying information to trainmen.

Setting a Switch.—Arranging a switch so as to connect certain tracks. When a switch is adjusted so as not to disconnect the main stem, it is said to be "set for the main track." The directions to trainmen and others, so often to be met with, to see that "switches are set right," means that they are to see that switches are adjusted so as not to disconnect the main track.

Shunting.—The English term for switching.

Side Track.—A track varying in length and running parallel with the main track, and connected with it at one or both ends. With unimportant exceptions, freight cars are loaded and unloaded on these tracks. The tracks vary in number and length with the business that requires accommodation. For the purpose of enabling trains to meet and pass each other, suitable side tracks are required to be located at convenient points. The terms familiar to railway men, "will take a side track," "will side track," mean that the train referred to will occupy a side track.

Signals.—The mediums by which intelligence

is conveyed quickly, and at a distance, between employes at night and by day, through the agency of the senses.

Sliding Wheels.—In England this is called skidding wheels.

Special Train.—A train provided for a special purpose and not named in the schedule.

Spur Track.—A track connected at one end only with the main track.

Station.—A place where the traffic of a railroad is received and discharged. The depot and its immediate vicinity. In the movement of trains a side track located at an isolated point on the line possesses the same significance as a station—a place where trains meet or pass.

Switch.—A mechanical apparatus constructed at the junction of two or more tracks. It is operated with a lever and cross bar, and by its aid diverging lines are connected or disconnected at pleasure. In England a switch is spoken of as "the points." What we call a switchman is there termed a pointsman.*

Switching is called "shunting" on English roads. It means the transfer of a car from one track to another; the manipulation of cars in yards; arranging and rearranging cars in trains, etc.

---

* It is an interesting fact that when the switch was first used the two movable rails composing it were not connected by a cross bar, nor was it operated by a lever, as described. The operator was compelled to move first one and then the other rail into position. The connection of the two rails was, in its day, esteemed a great invention, as indeed it was, paving the way for the use of the elaborate interlocking devices now in vogue.

Third Track.—A third track placed between the main tracks of a double track road for the purpose of enabling trains to pass each other with facility; a track occupied by trains of an inferior grade for the purpose of allowing trains of a superior grade to pass.

Through or Limited Train.—A train designed to accommodate through traffic.

Time.—The time allotted to trains in the schedule by which their movements are governed.

Time Table.—The schedule fixing the grade of each and every regular train, providing where trains shall meet or pass each other; fixing the maximum speed of trains and giving each regular train a definite number, and specifying the time of its arrival at and departure from stations. Rules and regulations governing the movement of trains form a part of the time table.

Train Dispatcher.—The official who directs the movement of trains. An expert.

Turn a Switch.—To disconnect one track to connect with another.

Way Train.—A train that stops at the various stations and is occupied in doing the local business of a company; an accommodation train.*

---

* The duties of employes on way freight trains in America are multifarious. In addition to the duties of trainmen, they handle much of the freight hauled in their trains. For instance, a freight car will contain small parcels of freight for many different points. It is the duty of the trainmen to unload this freight. When the freight to be shipped from a station is not sufficient to warrant the exclusive use of a car, it is piled upon the depot platform, to be

When a Train Has Lost Its Rights.—A regular train, when twelve hours behind time, loses its right to the road against all regular trains; is no longer provided for by the schedule; ceases to be a regular train. A train may lose its rights as against a particular train or trains, and still possess rights over other trains. Upon a single track road a train is not allowed to leave a station where it should meet a train of its own grade until, say, thirty minutes after its leaving time. Thereafter it proceeds on its course, keeping thirty minutes behind its time, the opposing train keeping out of its way. Trains of inferior grade cannot proceed until trains of superior grade have arrived, unless the latter are twelve or more hours behind time.

Whistling Post.—A post erected in the vicinity of stations, crossings and bridges to signal the engineman to sound the whistle.

Wild Train.—An irregular train for which no provision is made in the schedule. It is operated under special orders.

Wood or Fuel Train.—A train engaged in hauling the fuel of a company.

Y—A track of this shape; a convenient means of turning engines.

Many words used to express things in connection with the operations of railroads are readaptations from old forms, as I have intimated. Thus, in the days of stage coaches the place where

---

loaded by the trainmen into some empty or partially loaded car in the train. The engines of way freight trains do the switching at the small stations.

passengers engaged their seats was called the "Booking Office." When railroads were introduced the offices in which tickets were sold were called "Booking Offices." The man who guarded the stage coach in the troublesome times of Dick Turpin continued to be called a guard when put in charge of a railroad train. Inter-communication has made some of the words of the respective countries familiar to the people of each, but in many cases this is not so and never will be. I append below a few of the words that differ whose significance must be known in order to understand the nomenclature of railroads in the respective countries. Thus, what Americans call a baggage car, the English call a luggage van; what the former call a fireman, the latter call a stoker; similarly a ticket office is a booking office; a station agent, a station clerk; a baggage room, a cloak room; a passenger car, a carriage; baggage is luggage; a mail car is a post van; a conductor is a guard; an engineer is a driver; a freight car is a goods van; section foreman is a ganger; section men are plate layers. These are the more important differences in addition to those already noticed.

CHAPTER XVI.

Duties of Employes in Relation to the Train Service—General Rules Governing Telegraph and Telephone Operators, Line Repairers, Yardmasters, Passenger Conductors, Train Baggagemen, Passenger Trainmen, Freight Conductors, Freight Brakemen, Engine House Foremen, Supervisors of Signals, Signal Repairmen.

The technical rules and regulations governing the operation and movement of trains in single and double or more tracks, by telegraph and by telephone, under block systems or other mechanical methods, are fully set forth in other chapters in this book. There are, however, certain fundamental and general rules governing employes engaged in the train service which are just as necessary to be observed as the technical rules referred to, in order that trains may be promptly, economically and efficiently handled.

These rules follow:

General.

1. All employes should promote safety of trains and the good service of the company by all means in their power, reporting any defects in track, bridges or equipment, or any improper conduct of employes.

In case of accident to trains or damage to roadway, they should give their best efforts to clearing the road, and rendering any assistance in their power, whether it be in the line of their usual duty or not.

They should notice the condition of passing trains, and if they observe anything out of order they should notify the men upon the train by proper signal, and the train dispatcher when practicable. Trainmen should always observe the trackmen and other employes, as they pass, and be watchful for signals from them.

2. No person suspended or dismissed from one department or division of the service should be employed in another without the consent of the head of the department or division from which he was dismissed.

3. Switch and car keys will be furnished to designated employes, and should be receipted for on the proper form.

4. When an employe leaves the service, badges, signals, lamps, keys and such equipment supplied by the company should be returned.

5. No employe will be permitted to be absent from duty or to change places with another without first obtaining permission from his superior.

6. The assignment, or attaching of an employe's wages by garnishment process, or proceedings in aid of executions, will be considered sufficient cause for dismissal.

7. Whenever a subpœna-replevin attachment, or other legal process, is served upon any agent or officer, that person should immediately send notice of the same to the consignor and consignee, to the proper head of department and forward the original papers by first train mail to the law department.

If freight is seized by process of law, all charges collectible should be demanded, and a receipt for the property taken, before delivery is made to any officer of the law.

8. Waybills should not be changed without proper authority. Changes should be made with ink and authority for the change shown on the waybill. Name of person making the change, his station and date changed, should also be shown.

9. No persons, except those authorized, will be permitted to enter within the railings of telegraph or telephone offices.

10. The use of the telegraph and telephone should be restricted to affairs in which an immediate answer, or a saving of time, is of importance.

Messages should not be sent by telegraph when the use of train mail will accomplish the purpose. All messages should be briefly worded, and strictly upon the company's business.

11. Train dispatchers, operators, signalmen, conductors, train baggagemen, brakemen, enginemen, firemen, yardmen, section foremen and bridge foremen should pass an examination on operating rules before being permitted to work.

12. Conductors and enginemen should not go to meals, or delay

their trains from any cause, after receiving a train order which permits them to proceed; but if not ready to leave they should at once notify the train dispatcher, stating the time the train probably will be detained.

13. Conductors and brakemen of freight trains should station themselves where signals can be observed and exchanged passing through all stations. When passing through stations or yards where their train may be required to stop, approaching fuel and water stations, railroad crossings, at grade, drawbridges, track covered by slow orders, or on long descending grades, and at other places where safety requires extra precautions, brakemen should be on top of train in position to observe signals and assist in stopping trains should emergency require. Enginemen and firemen should keep watch for signals from trainmen at all times and obtain a "Proceed" signal from the rear after all switches at a station has been passed, this signal to be acknowledged by the whistle signal 14 (g).

14. Enginemen or conductors changing places or relieved by others before completion of their trips should carefully exchange all train orders and any special instructions they may have, and each should know that they are perfectly understood by the other. No change of this kind will be permitted without the consent of the train dispatcher.

15. Conductors and enginemen should report switches found out of order or misplaced.

16. Switches should be set for the dead rails over track scales when scales are not in use.

17. Only trainmen or switchmen may be permitted to ride cars or in any way assist in switching trains on the road or at terminals.

18. Standing upon the footboards of engines in motion while coupling to cars, going between cars, or any car and engine while in motion, or walking directly in front of a moving car or engine for any purpose whatsoever, is prohibited.

19. Employes should see that drawbars are in good order before going between cars. Stepping upon the front of approaching engines, jumping on or off cars or engines moving rapidly and all similar practices are dangerous, unnecessary, and are not required.

20. No person will be permitted to ride upon the pilot of a locomotive, either in the discharge of duty or otherwise.

21. Turn-tables should be kept locked, except while being used or in immediate charge of employes. When found unlocked, or table or lock out of order, the fact should be reported at once by wire.

22. Conductors should know at all times that their trains are provided with everything necessary to them to comply with the regulations of the company.

23. If a conductor or engineman discovers anything wrong with the track, bridges or culverts which would be likely to cause an

accident to a following train, he should leave flagman, call the section men and notify the train dispatcher by wire.

24. Great care should be taken to prevent the killing of live stock; trains should come to a full stop, if necessary, to avoid doing so. When an accident to live stock occurs, the conductor and engineman should report the same, as soon thereafter as possible, on the proper form.

25. When fires occur on or near the right of way that are likely to cause damage to property, when fences are down or stock is discovered on the right of way, when the line wires are down or otherwise in disorder, conductors and enginemen under whose observation such incidents may come will report them to the train dispatcher from the first station and will stop and notify the first section man seen. In dry and windy weather engines should be watched carefully to prevent causing fire.

26. The doors of freight cars should be kept closed when not in use. When cars are placed in trains it is the duty of conductor and car repairers to know that they are properly closed and securely fastened by the regular fixtures.

Doors should not be nailed or otherwise irregularly attached to the car, except in cases of emergency; under such circumstances they should be carefully watched to prevent them from becoming loosened and striking passenger trains, and permanent repairs should be made at the first car-repairing station.

27. No agent or employe shall, acting for the company, procure a warrant for the arrest or cause the arrest of any person charged with an offense without first consulting either the law or claim department and obtaining the necessary authority.

28. In case property is wrecked in transit, but is forwarded to destination, original waybill should accompany the same, bearing notation showing where damage occurred. If property is not forwarded to original destination, waybills should be turned over to the person in charge of clearing up the wreck, who will turn them over to the representative of the claim department, if on the ground, and if not will send them to headquarters.

29. Care should be taken to economize in the use of cars, small lots of freight being loaded into cars in passing trains. Exception may be made in case of perishable freight when passing trains have no room for it.

30. A corpse will not be received for transportation except in accordance with the regulations of baggage department, issued in conformity with the rules of the boards of health requiring presentation of a certificate issued by a physician, coroner or board of health, a transit permit, and an undertaker's certificate that the body has been properly prepared, and then only when properly encased and apparently in good condition; and not unless the corpse will be accompanied en route by a person in charge holding proper transportation for self and traveling on same train to destination.

31. No letters or packages containing money, whether registered or not, should be forwarded in the baggage cars, and train baggagemen will refuse to receive from any employe such letters or packages for transportation as "railway business." A train baggageman who discovers, after he has left a station, that a money-letter or package has been given him with other mail for transportation, will retain it in his possession until his return trip, and will then leave it at the station from which he received it, sending a report of the transaction to the general baggage agent.

32. Under no circumstances will mail be received for transportation as railway business except such as actually pertains to the service. All other mail matter should be sent by United States mail.

33. When freight is received for a station at which there is no agent, a separate waybill should be made and the charges prepaid. Agents should note on the receipt given that it is received subject to the condition that the company is not to be held responsible for it after it is unloaded at destination. All freight so received should be waybilled to the first station at which there is an agent beyond the prepaid station, at rates current to the prepaid station. No *order* or *notify* shipments should be received for prepaid stations.

To facilitate handling by conductors, and that it be left at the station to which it is destined, a conspicuous notation should be made on the upper left-hand corner of all waybills for freight to be left at prepaid stations or sidings.

When property is offered to conductors for transportation at stations at which there are no agents, it should be accompanied by full shipping directions, and marked properly. The conductor should furnish the agent at the first regular station beyond such prepaid station with full billing instructions. The agent should then make a waybill reading from his station to the station to which the freight is destined, provided it is a station at which there is an agent. When freight is destined to a prepaid station, the waybill should read to first station beyond at which there is an agent. The rates current between the station at which the freight was loaded and its destination should be used. The name of the station at which the freight was loaded should be noted in the consignor column in every instance.

When freight is received by a conductor at a prepaid station or siding for transportation to another prepaid station or siding, there being no regular station intermediate, an amount sufficient to cover all freight charges should be collected from the consignor. The amount collected should be noted on the return to the accounting department and on the waybilling directions. It should also be entered in the spaces provided therefor on the record of freight loaded. The return should then be sent to the proper accounting officer as in other cases, and the waybilling directions, together with the money collected, delivered to the agent at the first regular station, the receipt for the money being taken

on the conductor's record of freight loaded, in the space provided for that purpose.

When unloading freight, if consignee is at platform to receive it, conductors will take receipt for same from the consignee on the original waybill. If consignee is not there and property is valuable, it should be taken by the conductor to the first station at which there is an agent and the agent at that station should immediately notify the consignee in writing that the property is at his station ready for delivery. No "*order*" or "*notify*" shipments may be unloaded at a station at which there is no agent, *whether the consignee is there to receive it or not,* but it should be taken by the conductor to the first station at which there is an agent, notice being given of its arrival in the manner mentioned.

34. Conductors should examine contents of cars loaded at stations having no agents, and if they believe cars are loaded in excess of capacity allowed, or otherwise improperly loaded, they should not be taken in train, but a card left on such cars informing shipper of reason for leaving them, requesting him to at once rectify the loading. Conductors should notify the proper official by telegraph of all such cases. Conductors will be held responsible for taking improperly or overloaded cars in their trains.

35. Merchandise, flour, sugar, butter, or other property of similar kinds should not be loaded in cars unfit to carry it, such as cars previously loaded with oil, lime, coal, or other unclean freight. Agents should see that the floors of the cars are clean before merchandise is loaded into them. When cars are not loaded with bulk grain, agents should see that grain doors are properly raised.

36. Conductors and agents are required to supervise the loading and unloading of way freight and know that all freight waybilled is loaded or unloaded. The waybill should be checked, and any discrepancy or damage to any property noted upon it; the marks and contents of packages should be called to agents as they are taken out of the car. Should they find freight for which they have no waybill, they will unload it at the station marked on the package, if discovered in time; otherwise, they will unload at the next regular station, calling the attention of agent at that station to the package, and report it to the proper officer by wire. Conductors are expected to tally the freight as it is unloaded from the cars, and if any over or damaged freight is discovered, or if any is short, to inform the agent at the time it is unloaded, and make the notation on waybill.

Whenever a conductor finds a shipment without billing that has been carried by a station or is destined to some point not in his territory, he will make an "over report" in triplicate. The *original* should be left with the over freight, the *duplicate* sent to the officer handling the overs and shorts and the *triplicate* kept by the conductor for his record.

Over freight should be left at the station at which it is found,

together with the conductor's over report, unless the train is moving in the direction that the freight should go. In that case, the freight should be left in the car and unloaded at the station nearest to its destination.

Agents and conductors should handle all dead-head astray freight with the utmost promptness, and in no case should it be permitted to lie at a station unnecessarily.

A waybill should be made in triplicate by conductors in all cases of short freight when the car is not made empty at the station checking short. The *original* should accompany the waybills for the car from which the freight is short, the *duplicate* sent to the proper official by first train telegram mail and the *triplicate* kept by the conductor for his record.

At the station where the car is left a thorough search should be made for this freight, and if it is found it should be forwarded to destination, dead-head astray. The agent will also enter his forwarding record, etc., on this report, in the place provided for that information, and send it by the first train mail to the official handling the overs and shorts on his division. If shipment is not found and the car is made empty or so nearly empty that the agent is *absolutely* sure that the shipment is not in the car, he will then send this report to the proper official with that information. If the car is not made empty, this report should, in all cases, go with the waybills for the car until it is empty. All conductors handling the car, as well as agents at transfer stations, will search the car thoroughly while it is en route.

37. At stations where way freight is to be loaded or unloaded, agents will break and destroy the seal of each car door opened; as soon as the freight has been unloaded or loaded he will re-seal the same with the seal of his station, and keep a record of the seals removed from and placed on such cars. When car contains freight for stations having no agent, conductor will break seal, keeping record of same, and have car re-sealed upon arrival at first regular station.

No freight should be unloaded from a train on which passengers are carried while it is moving.

38. Conductors should see that all articles remaining in a car from which way freight has been unloaded are so placed that they cannot fall or be damaged.

39. Agents should see that seals are so placed on cars that the doors cannot be opened without breaking them, and that numbers on seals can readily be taken. Agents and conductors will report all cars discovered by them to be improperly sealed.

40. Conductors should examine carefully all waybills of carload freight, and if no weighing stamp or other evidence that the freight has been weighed appears, they will call the attention of agent at the first station having track scales, who will correctly weigh car and contents, and note gross, tare and net weight on

waybill, and immediately report same to the proper official, giving full particulars.

41. The last conductor handling a waybill is required to fill in the information called for on the back of waybills, giving dates, train number, and signing his name.

42. Agents and conductors are forbidden to transfer live stock en route, to different cars, or take one or more animals out of one car and place them in another, unless both cars are shipped by and consigned to the same parties, and request is made so to do by shipper, consignee or man in charge, and when this is done a notation of the transfer should be made on the live stock contract and on the waybill.

43. Waybills for shipments of live stock should show day and hour the stock was loaded, and cars tendered by connecting lines should not be accepted unless this information is furnished. This is necessary in order that all concerned may be able to comply with the laws of the United States in relation to the transportation of live stock, as follows:

By Act of Congress: It is unlawful for any railroad or express company, in transporting cattle, sheep, swine or other animals from one state to another, to confine them in cars for a period longer than twenty-eight consecutive hours, without unloading them for rest, water and feeding, for a period of at least five consecutive hours, unless prevented by storm or by other accidental or unavoidable cause which cannot be anticipated or avoided by the exercise of due diligence and foresight. This does not apply to less carload or other shipments with proper food and water, and space and opportunity to rest in the cars.

In estimating such confinement the time consumed in loading and unloading shall not be considered, but the time during which the animals have been confined without rest, water and feeding on connecting roads shall be included, it being the intent of the law to prevent the continuous confinement of the animals beyond a period of twenty-eight hours, excepting that upon the written request of the owner or person in custody of a particular shipment, which written request should be separate and apart from the bill of lading or other railroad forms, the time of confinement may be extended to thirty-six hours.

Sheep are not required to be unloaded in the night time, but when the twenty-eight hour limit expires in the night time they may be continued in transit to a suitable place for unloading, but not to exceed thirty-six consecutive hours. If the twenty-eight hour limit expires in the daytime, the request of the owner or person in custody is necessary to extend the time to thirty-six hours.

It is not expected that railroad employes will solicit a request for an extension of the time to thirty-six hours, but whenever the owner or person in custody makes the request it may be complied with as per instructions.

In instances where it is known that the stock cannot reach a point where it can be handled for rest, water and feeding, such action should be taken as will comply with the provisions of the law.

When unloaded, the animals should be properly fed and watered, either by the owner or person in custody, or, if he fails to do so, then by the railroad company, at the expense of the owner, which expense shall be a lien upon the animals, and collectible as destination in the same manner that transportation charges are collected. The owner or person in custody of the animals has the right to furnish the food if he so desires.

In case request is made that the period of unloading for rest, water and feeding be extended to thirty-six hours, it should be in writing and in prescribed form, when practicable (separate and distinct from any printed bill of lading or other railroad form), giving the number of each car, and properly signed by the owner or party in custody of the shipment. One copy of the request should be securely attached to the face of the waybill, or one of the waybills for each consignment, and the duplicate carefully filed and preserved by the billing agent, or agent at junction point where stock was delivered to the company, so it may be produced readily when called for. In case such a request is made upon conductor of train handling the stock, he should attach one copy of the same to waybill and send the duplicate by registered mail to the billing agent, or agent at junction point where stock was delivered to the company, for filing.

When requests are made on agents or conductors, they should, in addition to attaching requests to waybill, make notation on the face of waybill for each car of stock included in the request, "shipper's thirty-six hour request attached."

A supply of slips showing the form in which requests should be made will be furnished agents and conductors.

At stations where live stock is unloaded for rest, water and feeding, as required by the United States laws, agents should enter on waybills name of station and date and hour when reloaded.

Whenever stock is fed and watered, proper endorsement, showing place and the time reloaded, should be made upon waybill, in addition to charge for material furnished.

When the instructions on the waybill in regard to stopping live stock to feed and water are changed at request of owner or party in charge the conductor should make notation to that effect on waybill and have it signed by the party making the request.

Conductors in charge of stock will report to the train dispatcher the time stock was last loaded, and if proper request for extending the time is attached to waybill, make notation on report "Shippers make thirty-six hour request."

A list of stations at which live stock can be fed and watered in transit is furnished by circulars or tariffs.

Agents are expected to acquaint themselves with the quarantine proclamations of the United States Department of Agriculture and the various States, issued from time to time, prohibiting the transportation of live stock from certain localities, except in accordance with regulations necessary to prevent and suppress the spread of contagious and infectious diseases among such animals.

44. Station and track employes should see that material stored along the track and at stations is neatly piled and the right of way and station grounds kept in tidy condition. Material should not be piled within six feet of nearest rail either main or side track.

45. Station agents, operators and watchmen should report immediately by wire to the proper official severe rainstorms, high wind or sudden rise of streams in their vicinity, and should see that the section foreman is on hand with his men to protect the track from damage. They should see that cars have not been removed by the wind to endanger the passage of trains, and remain on duty under the above circumstances until excused.

46. Conductors and enginemen when overtaken between stations by severe storms or indications of high water which threaten damage, will proceed with great caution, keeping train under complete control, and at such speed that it can be stopped in time to prevent accident. They will also examine bridges and culverts, or other places subject to damage by high water, and if they find any indication of danger, will, on arrival at the first station, notify the agent or operator, report the fact by wire to the proper officials for instructions, and will not proceed until instructions are received.

47. Train dispatchers, agents and operators, in cases of severe storm or high water likely to endanger the track or safety of trains, will notify such trains to be under full control within the limits of the storm, keep the road officials advised and will require the section foreman to inspect and report the condition of track at once.

In case of threatened storm, the train dispatcher will obtain frequent weather reports.

During extreme cold weather trains will not be permitted to exceed schedule time, without special instructions.

48. Any train running upon or near the time of a train in the same direction scheduled to carry passengers will exercise extreme caution in approaching and passing through stations at which such train is scheduled to stop, expecting to find persons crossing tracks.

49. Reading newspapers, books or periodicals by enginemen, trainmen, signalmen, watchmen and crossing flagmen while on duty is forbidden.

50. The solicitation of alms, etc., upon trains or at stations is forbidden.

Telegraph and Telephone Operators.

51. Telegraph and telephone operators will be appointed by a designated officer.

They will report to and receive their orders from the chief train dispatcher, and will comply with the instructions of other designated officials.

52. They are required to be constantly on duty during the hours assigned, unless excused by the train dispatcher. Except in emergency cases, they will not be allowed to remain on duty a longer time than that prescribed by law. Unless relieved by another, operators will be excused by the train dispatcher.

When relieving each other, they should make a transfer on a blank form provided for the purpose, of all orders that are not fully executed, and should see that the relieving operator fully understands them.

53. In closing an office, all instruments at the switchboard should be cut out, care being exercised not to cross the wires. The address of an operator should be kept posted in the bill box or elsewhere as directed, showing where he can be found.

54. A register of the arrival and departure of all trains should be kept and reported to the train dispatcher; weather reports should be made as required, and any sudden change or heavy storm should be specially reported.

55. Great care should be used in adjusting instruments at all times, especially in bad weather; the key should never be opened unless positive that wire is not being used. Contention for circuit will not be allowed.

56. Trains should be blocked as provided in the rules, unless otherwise directed. A full set of hand signals should be kept in good order and always ready for immediate use, and used strictly in accordance with the rules; when fixed signals are not in proper working order, the fact should be promptly reported to the train dispatcher.

57. Offices should be kept in a neat and orderly condition; instruments clean and in good working order, and not taken apart, or the arrangement of the wires, tables and appurtenances altered, without permission of the proper official, who should be notified when repairs are needed.

58. If the line fails, each operator should at once test the wires and report, if possible, on which side of his office the failure is. In case of any trouble on them, he will quickly look for its whereabouts and be sure that it is not in his office. The use of ground wires is strictly prohibited, except to test wires or in case of emergency.

59. Operators should invariably sign their office call when using the line for any purpose whatever. It is their duty to promptly discover and remedy inside office troubles caused by open keys, loose connections, etc. They should know that the ground wires are

in good condition, examine switchboards, keys, instruments and batteries each day, and know that all binding screws are tight, all connections good and properly made, and that paper or other inflammable matter is kept from the vicinity of wires and switchboards. They should familiarize themselves with switchboards and cut-outs, so that they can properly switch wires in testing, see that wires are properly labeled on the switchboard and co-operate with the party testing wires, assisting in every way possible to clear wire trouble.

60. They should be courteous in their intercourse with persons transacting business at their offices and over the wires. They will not receive messages to be transmitted free unless signed by an officer, agent or employe, or a reply to same.

61. Messages sent should be preserved and those received promptly delivered. All messages are confidential, and should not be allowed to be read by any person except those to whom they are addressed; nor may their contents be the subject of conversation or remarks.

62. All messages not relating to the business of the company should be paid for, unless otherwise ordered by the proper authority.

63. Railroad messages, after being transmitted, should be filed daily and preserved until otherwise ordered.

64. Messages received for delivery to a general officer who may be en route upon the road should be enclosed in a proper envelope, sealed and addressed to him before delivery.

65. All instruments will be furnished by the company, and no private instrument will be allowed on the wires. No private lines may be connected with the offices or buildings without permission of the proper official.

66. The wires are not to be used for the transmission of communications which may be sent by train without detriment to the company's interests, and operators should report any such cases observed.

67. Standard time will be sent from —— a. m. until —— a. m. daily, and has absolute right to the circuit.

Breaking in upon the circuit while time is being sent is prohibited, and operators should be sure that their instruments are properly adjusted.

68. Telegraph students will not be permitted to receive or forward messages unless in the presence of the regular operator and under his direction. The attention of students should be directed to the rules of the company, and particularly those relating to the privacy of telegrams.

69. There should be no delay in obtaining answers to messages. If a reply cannot be had in reasonable time, the sending office should be promptly notified of the reason.

*Telegraph Numerals.**

1. Wait a minute.
3. Train report.
4. Where shall I go ahead?
5. Have you any business for me?
8. You are breaking. Close your key.
9. Conditions requiring immediate action.
18. What is the matter?
19 or 31. Signal for train orders.
23. Messages for all offices.
25. Busy on other lines.
86. Division Superintendent or Superintendent of Telegraph.
92. Deliver quickly.
96. President, General Manager or General Superintendent.
134. Who is at the key?

The usual abbreviations for the names of the months and stations.

The circuit may be secured by any of the following signals, which take precedence in the order named:—"96," "86," "9," "Line," "19" and "31."

Line Repairers.

71. Line repairers report to and receive instructions from a designated official, but will comply with the instructions of the train dispatcher.

They should always be provided with a full set of tools suitable for their work and be ready to respond immediately to any orders they may receive.

They should report each morning the part of the road on which they expect to be during the day.

They will go over their respective districts frequently, examine any office they may be at, and see that the rules are being complied with.

They should see that a limited supply of main line wire is left at test offices, to be used in case of emergency, and that it is kept in a designated place ready for use. They should see that section foremen also are supplied with line wire and will instruct them as to its use. Immediately after repairing a break in the wires or removing any trouble therefrom, they should report to the train dispatcher the locality and cause of same, and render to the proper official a report of same.

They should see that all unused material is properly stored, and use strict economy in its disposition, and at stated times collect all the old copper and zinc and forward the same as directed.

---

* These numerals are not uniform, each road adopting such numbers as best suit its requirements.

Yardmasters.

72. Yardmasters will see that trains are made up and leave at the designated time; that proper slips or waybills accompany each car; that doors of all loaded cars are properly secured and sealed, and that doors of all empty cars are closed and secured.

73. Cars or tanks containing oil or other inflammable substances should in no case be placed next to the engine or the caboose, when there are other cars in train; they should be ten cars from the engine or caboose, when possible. Empty flat and oil tank cars should be placed next to the caboose when practicable. Cars loaded with stock will be placed as near the caboose as the make-up of the train will permit.

74. Yardmasters will give special attention to facilitating car inspection, the proper placing of cars needing repairs, and the transferring of freight liable to delay.

75. Yardmasters should keep a record of all trains and cars, note all irregularities, and see that reports of same are made to the proper officer.

Passenger Conductors.

76. Passenger conductors will be responsible for the movement, safety and care of passengers and train, and for the vigilance and conduct of the men employed thereon, and should report in writing any misconduct or neglect of duty.

77. Conductors should report for duty at the appointed time; when necessary, assist in making up train, and on arrival at the terminal of the run they should remain in full uniform with their train until all passengers have alighted, and will see that all necessary assistance is given them.

78. Conductors should know their train has been inspected, air brakes and air signals tested, before leaving terminal, and wherever train or engine is changed; that the couplings, brakes and running gear are in good order; look over the train for anything defective or in bad order, such as windows, ventilators, matting, seats, etc., and report them; also, that the prescribed signals are correctly displayed.

79. Conductors should require brakemen and flagmen to read and understand all train orders.

80. Conductors should attend courteously to the comfort and wants of passengers and see that trainmen do the same; that passengers are properly seated; that proper lighting, ventilation and temperature are maintained, and drinking water provided.

In passing through the dining cars the cap will be removed.

They will not allow passengers to ride on the platforms, in the baggage, express or mail cars, or on the engine, or violate in any respect the regulations for their safety.

The doors of all coaches hauled in passenger trains should be

kept unlocked while train is in motion. All toilet room doors should be locked approaching and while standing at important stations and terminals.

81. In case of accident conductors may, if necessary, command the services of any trainmen and all employes available. They will, in addition, obtain the full names and addresses of all passengers on their train, whether injured or not; names and addresses of persons who witnessed or have any knowledge of the accident, and report at once by wire to the proper officials; also report them on prescribed forms.

82. Conductors will, when examining tickets, inform passengers destined to points on branch or connecting lines at what station they will change cars, and of the probable location and leaving time of the train to which they will change, and will notify brakemen regarding the proper discharge of passengers.

83. It is the duty of conductors to prevent passengers endangering themselves by imprudent exposure; to protect passengers who are lawfully on their trains from rudeness, intoxication, threatened violence, abusive or obscene language; and any passenger acting in a disorderly manner, or who annoys passengers as stated above, may be removed from the train at the next regular open station, whether provided with a ticket or not.

Passengers should never be ejected from the cars for any cause, except at a regular open station. No unnecessary force should be used.

84. Conductors should ascertain that passengers are provided with proper transportation, or collect fare from all those who are not.

If any person should refuse to produce proper transportation, or pay fare, the train should be brought to a stop at a regular station and such person requested to leave the train. In case of refusal to do so, the passenger should be removed therefrom. This should not be done under circumstances that would endanger the health or safety of the person ejected. It should not be a child, a person of unsound mind, or in such feeble or helpless condition as to be unable to take care of himself or herself at the place of ejection.

Each conductor will be held responsible for the exercise of reasonable discretion in the performance of his duty, maintaining self-control, and being careful to use no unnecessary force that might subject the company to litigation or annoyance.

When necessary to eject a person from the train, the name and address of such person, and the names and addresses of a number of passengers who witnessed the removal, should be ascertained and the occurrence reported to the proper officials.

85. No gunpowder, dynamite, nitro-glycerine, gasoline or similar explosive article shall be transported in any car attached to a passenger train.

86. Freight cars of any description, hauled in passenger trains, should be placed next to the engine.

87. Hotel representatives or other unauthorized persons should not be permitted to solicit business or distribute advertising matter, nor should beggars be allowed to solicit on the trains. Gambling on trains is strictly forbidden.

88. When a passenger train has stopped at a station platform it should not be moved to take coal or water or do other work until the conductor permits by the usual signal.

Trains should never be permitted to be moved while passengers are getting on or off.

89. Conductors should see that news agents do not mar or deface cars in taking on or removing their boxes. News agents will be allowed only on passenger trains, and only one upon any train. Each news agent should be provided with a card or certificate signed by the manager of the news company, attesting his employment by that company, and wear the prescribed uniform while on duty on the train.

He will be under the supervision of the conductor, whose duty it is to see that he conducts himself properly and that he conforms to these rules. In case of misbehavior on the part of any news agent, the conductor should report it to the proper official.

News agents will carry their boxes where directed. They will be permitted to pass quietly through the trains, and to offer their wares for sale in a respectful manner.

They may sell on the trains, newspapers, periodicals, and books of a respectable character; small trinkets, confections, fruits, etc., also cigars and tobacco in the smoking cars. They will not be permitted to sell immoral, doubtful papers, nor other such literature, or pictures, nor prize packages of any kind.

They will not be permitted to put their wares in the laps of passengers, nor upon the seats, nor to cry them in a loud voice; but in all ways they should avoid giving offense or causing annoyance. They will not be permitted to play cards or solicit card playing while on trains. Conductors should see that these rules are obeyed.

90. Conductors should see that as little noise as possible is made in and about sleeping cars.

91. All articles left by passengers should be marked to indicate on what date and train they were found and by whom, and left with station master or designated place at division terminal.

92. At stations at which trains stop for meals or lunch notice of departure should be announced in the dining or lunch room in ample time to allow passengers to enter the train before it starts.

93. Each coach and baggage car should be supplied with the following tools, and conductors are required to check them over on receiving cars at terminal and junction stations, on taking their train at starting point, and on leaving it at destination, reporting all shortage or damage.

Tools for Coaches.

94. 1 axe, 1 saw, 2 fire pails, 1 sledge, 1 cold chisel, 4 hand fire extinguishers.

Tools for Baggage Cars.

95. 1 tool box, 1 switch cable, 2 frogs, 1 jack, 1 jack lever, 1 sledge, 1 axe, 1 steel bar, 2 brasses, 1 pail of dope, 1 train line hose, 1 pair signal hose, 1 coach chain, 1 saw, 1 cold chisel, 4 hand fire extinguishers.

Additional in Winter.

96. 2 scoop shovels, 1 or 2 barrels of coal, 1 track shovel, 1 pail of salt, 1 stove shaker, 1 fire shovel, 1 steam heat hose.

Train Baggagemen.

97. Train Baggagemen are responsible for the safety of all property intrusted to their care, and will provide themselves with a book of rules and regulations of the general baggage agent and comply with all instructions issued by that officer.

98. Train Baggagemen should report for duty at the appointed time, handle baggage carefully, and remain in the baggage car during the entire trip, except when called upon to perform other duties; also remain in the car at the end of the trip until all baggage and other matter is delivered and receipted for.

Car doors should be securely locked at all times when not in use, and no person except those in performance of duty may enter a baggage car.

99. Baggagemen, or others, before discharging any baggage, should be sure that it will clear the train, and that there is no person or object in the way which may be struck by it.

100. Baggagemen should have a full supply of hand signals on hand ready for immediate use if called on to do flagging.

101. No property should be carried unless it is checked or way-billed, without permission from proper authority.

102. Baggage received at stops where there are no agents should be checked and checks for baggage delivered at such points should be taken up. All checks should be kept under lock and key.

103. Proper attention should be paid to the custody and delivery of United States mail and any irregularities promptly reported to the proper official. Close attention should be given to the custody and delivery of train mail.

Passenger Trainmen.

104. Passenger trainmen should report for duty at the appointed time, and when necessary assist in making up train.

105. Passenger trainmen should look over the train carefully before starting, and know that all couplings, brakes and running gear are in good order. The train should be inspected as often as possible during the trip, to see that water coolers are supplied with

ice and water, and that the lamps, whistle signals, air brakes, steam heat and all connections are in good working order. When necessary to avoid delay, they should assist in handling baggage.

106. Passenger trainmen should take a position at the car steps to assist passengers in entering and alighting from the train; they should ascertain destination of passengers, directing those without tickets to the office.

107. Passenger trainmen should display prescribed signals on the train, and have all necessary supplies and signals on hand ready for immediate use.

108. The trainman acting as flagman, will compare time with the conductor before assuming such duties, and consider it his especial duty to protect the rear of the train in accordance with the rules, and allow nothing to interfere with the prompt and efficient discharge of that duty. His position on the train while running is on the rear car; he should obey the signals from the engineman prescribed by the rules; but should never wait for the signal or orders from the conductor when the train needs protection. When not required to perform other duties at station stops, he should occupy a position on the ground at the rear end of train.

109. The front trainman should have the necessary signal appliances on hand, ready for use, and be prepared to protect the front of the train, whenever necessary; in the absence of the rear trainman he will immediately assume his duties.

110. On leaving a station trainmen will pass through the coaches, and with closed doors announce in a distinct voice the next station at which the train will stop. If the stop is for meals the trainmen will so state, giving the length of time. Upon approaching a railroad crossing where a train stops, trainmen should announce it by calling in each coach, "The next stop is for railroad crossing, not a station." Junction points and terminals will be announced, passengers notified when to change cars and attention directed to their parcels and other articles.

111. Trainmen should see that passengers are properly seated. Pass through sleeping cars only when necessary and then as quietly as possible, exercising special care at night to avoid disturbing the occupants.

In passing through dining cars the cap will be removed.

When not engaged in other duties trainmen will pass through the coaches frequently to comply with the above instructions and trainmen will sit near the car door ready to promptly respond to any emergency that may be required.

112. After leaving a station, trainmen will securely close vestibule doors and platform traps, and observe whether there is any one clinging to the hand rails of the vestibules. They should also place a small chain across the opening of the rear platform to the rear car before leaving a terminal, unless it is protected by gates.

113. Trainmen should watch their trains very carefully to discover anything wrong in the matter of journals, brakes, or other

defects liable to be dangerous; they should keep a sharp lookout for all signals from the train and from stations. The rear trainman must ride on the rear platform of the rear car until his train has passed beyond the outer switches to observe any signals which may be given.

114. Suburban trainmen will distinctly announce in each coach immediately before arrival of the train at stations the following: "Do not forget your parcels."

Freight Conductors.

115. Freight conductors should report for duty at the appointed time and when necessary assist in making up train.

116. Conductors should see that trainmen, under all circumstances, are careful in handling freight. Negligence in this particular on the part of any employe will be considered sufficient cause for his discharge from the services of the company.

117. Freight conductors are responsible for the movement, safety and proper care of their train, and for the vigilance and conduct of the men employed thereon; and should report in writing any misconduct or neglect of duty, and obey the following rules:

118. Conductors should know that they have all necessary supplies and signals on hand and ready for immediate use.

119. Conductors should know that train has been inspected before leaving terminals and that couplings, brakes, ladders, running boards and running gear are in good order and car doors fastened and properly secured. Any neglect by car inspector should be reported at once. They should also inspect train as opportunity offers during trip. Examine all cars to be taken at intermediate stations and if not in safe condition leave them and report to train dispatcher, giving defect. Defect cards should be attached to defective cars in their trains.

Particular attention should be given to closing and securing car doors in double track districts to avoid accident to passing trains. Cars with doors insecurely attached should not be moved in trains.

120. Conductors should examine bulletin boards before starting and at each point possible thereafter; where train registers are kept, they should enter all the information required.

121. Conductors should know that the prescribed signals are correctly displayed.

122. At the end of each trip, all reports required should be made, observing all special instructions, and depositing such reports in the required places.

123. Passengers, including employes not on duty, should not be carried on freight trains without proper authority; but persons accompanying live stock or perishable freight, for the purpose of taking care of it, will, on presentation of proper transportation, be allowed to ride on the same train with it, but in the caboose only.

124. Freight trains that carry passengers will be particular to have the caboose stop at the depot platform to receive and dis-

charge them. Before the arrival of train at any station where they stop, the conductor will distinctly call out the name of station.

125. Cars loaded with live stock should be placed next to the caboose when practicable. A careful examination should be made of doors, locks, and fastenings, and cars should not be moved until properly secured. Every facility should be rendered parties in charge for proper examination and care of their stock, notifying attendants when train is expected to stop, and a sufficient length of time allowed to afford them an opportunity to examine it. When stock gets down, the car will be left, at request of attendant, at any station. Cars should be placed conveniently at chutes for party in charge to unload, and during hot weather such stock as may require it should be showered, except when request is made not to do so by the party in charge.

Care should be taken that men in charge of live stock have proper facilities for taking care of stock under their charge in trains and at stations. Agents should use great care to secure the doors of cars containing stock, and, as a precaution against escapes, should, when necessary, nail strong boards across the inside of the doorway, at a proper height (two-thirds the length of the door), and sufficiently close together to surely prevent the stock from getting over or through them. The grain doors of box cars should never be nailed, but should be placed in position and securely fastened, when live stock in less than carload is loaded therein.

Horses should not be loaded in cars that have defective cross-bars, doors or broken slats. Agents should so far as possible personally inspect all cars being loaded with horses and not allow any car to be so loaded which has defects that might cause injury to the horses.

When parties in charge of live stock unload stock for feeding or other purposes, while en route, it being understood that the stock must remain in the possession of the company while being fed, and if animals are left out of car on account of being crippled or dead, notation to that effect should be made on the waybill by the agent at the station where such animals are taken out.

126. Conductors should enter the initials and numbers of all cars in their train, in their train record book, also other information required; when book is filled it should be returned to the proper official.

127. The inside and outside of all waybills should be examined for any notations requiring them to set out, weigh cars, etc.

128. Conductors should see that the speed of their train is properly governed.

129. At stations conductors will do such switching as may be required by the agent. When necessary to disturb cars that are being loaded or unloaded it should not be done until ample

notice is given to all persons in or about them. When so moved, they should be returned to the same position as found.

Cars should not be detached from an engine to be run in on side tracks where cars are being loaded or unloaded.

Running switches should not be made with cars loaded with live stock when possible to avoid it.

Conductors should see that there is a thorough understanding with other crews that may be switching at the same station.

Highway or public crossings should not be obstructed by trains or cars.

At junction points no part of train should stand on railway crossings or interlocking system.

130. When meeting or being passed by a passenger train at a station, conductors should see that their train is opened to allow free passage to and from station, in addition to opening the street crossings.

131. Conductors should not set out cars that are in bad order, if the necessary repairs can be made or safely hauled to the next car repairer's station.

132. Conductors should see that cars left on side tracks are properly secured and clear of the main track. In leaving cars at any station they should be placed conveniently for loading or unloading. Cars should be so placed as not to project over line of highway crossings. If a car is set out without a brake, the wheels should be securely blocked.

Cutting off engine and cars before a train has stopped is prohibited.

133. Conductors should not handle cars or freight without proper waybills, or take waybills without the freight or cars; they should examine all cars forwarded as empty from any station, and be sure they do not contain freight.

134. Conductors should call attention of car repairers, or station agent in their absence, to any damage which may have been done to cars, which may come to their knowledge, that the cars may be promptly repaired, and note same in their reports. Cars set out in bad order should be reported at once to the train dispatcher, stating number and initials, contents, nature and extent of damage; the nature of defects should be noted on waybills.

135. Draw-bars, brakes, car doors, etc., that may become detached, should be picked up and put into the car they came from, or taken and left with the car.

136. Conductors should promptly report any lack of attention on the part of agents, or other persons, whose duty it is to aid in the passage of trains.

137. Flat cars, empty and when with less than 20,000 lbs. of a load, and empty oil tanks should be hauled next ahead of caboose.

138. Chairs will not be permitted in caboose cars.

139. Cars that in the judgment of conductors are unsafely

loaded, will not be handled in trains and the facts should be reported to the train dispatcher.

140. If trainmen discover contents such as grain, oil, etc., leaking from cars, or that cars are in unfit condition to carry loads safely to destination, the matter should be immediately reported to the train dispatcher for instructions, the cars set out and repaired or transferred, as may be necessary.

141. When trains separate on account of defective coupling, the fact should be reported, giving date, train and car number, and point at which train parted, also specifying make of coupler and nature of defects. A similar report should be made in person to car inspector or his representative at first terminal.

142. If more than one engine is to be hauled in a train, place at least three box or stock cars between them.

143. Except by orders from the proper official, dead engines should not be hauled without side rods; when hauled without them the speed of the train should not exceed fifteen miles an hour.

144. When refrigerator cars are not in train in accordance with refrigerator schedule, the train dispatcher should be notified by wire at once. Bunkers should be examined to ascertain if sufficient ice is provided to carry car to destination. If in need of re-icing, the train dispatcher and agent at the first terminal should be notified.

145. Conductors should carefully check with the waybills (in conjunction with the agent if possible) all freight loaded and unloaded, a record of freight over, short or bad order made. When necessary to transfer freight from one car to another, the transfer should be recorded on face of waybill, together with the number of the car to which transferred.

146. Conductors should carefully examine seals before leaving, at end of run, when cars are set out en route, and at all points where train stops a sufficient time to allow such examination to be made; when a seal is found broken or door of car open, and cannot be accounted for it should be immediately reported to the train dispatcher and noted in car book.

147. Conductors are responsible for all freight in their charge and will see that it is handled with care; that shortage or damage to any property, whether loaded or unloaded by them or otherwise, is noted on the waybill; and cause the marks and contents of packages to be called out as they are taken from the car. Should they find freight for which they have no waybill, they will unload it at the station marked on the package, or at the next regular station, calling the attention of agent to the package, and report the same by wire.

148. Way freight should be unloaded on the platform of the freight house, or at such other place as the agent may designate.

149. When freight is discovered damaged or pilfered, whether unloaded by them or not, conductors should report particulars to the proper official.

150. Cars containing perishable property should have precedence over other freight, and should not be left short of destination, unless for repairs.

151. Should a loaded car become disabled, or from any cause be set out, the waybill should be delivered to the agent where left or at the next regular station, having endorsed on it when, where and why left. It should be reported to train dispatcher. If necessary to transfer freight, the fact should be noted on the waybills, giving numbers and initials of cars transferred to, and date and station where transfer was made. Goods should be carefully checked from waybills, noting condition at time of transfer. Conductors should sign their names in full on such waybill, and keep a record of the transaction in car book.

152. Cars should not be left on passing tracks without authority of train dispatcher.

153. Conductor should, before starting on each trip, compare time with the brakeman who will act as flagman; they should never intrust the duties of a flagman to any one not entirely familiar with the rules, except in emergency, and then give the fullest instructions that circumstances will permit.

154. Conductors will station themselves upon the train in the best position possible to enable them to see that their train is intact, that their trainmen properly perform their duties, and know that flagmen go back promptly when necessary to protect the train.

155. Each caboose car should be supplied with the following tools and supplies, and conductors are required to check them over at terminal and junction stations; on taking their train at starting point and on leaving it at destination, reporting all shortage and damage:

1 axe, 6 brasses, 1 broom, 1 pail of dope, 2 marker lamps, 1 cooler can, 2 two-gallon oil cans, filled; 2 fillers, 2 chains, 1 chisel, 1 dipper, 1 wash dish, 3 red flags, mounted; 2 green flags, mounted; 1 pair of frogs, 1 hammer, 1 coal hod and shovel, 1 packing hook, 1 packing iron, 1 jack and lever, 3 red lamps, complete; 5 white lamps, complete; 1 watef pail, 1 switch cable, 1 saw, 3 scoop shovels (in winter), 12 torpedoes, 1 18-inch monkey-wrench, 1 lb. of waste, 2 packages of wicks, long and short; 1 package of matches, 1 package of tripoli, 1 package of lye, 2 air hose, 2 indicator lamps, 1 set of indicators, 1 cupola lamp, 12 fusees—knuckles.

Freight Brakemen.

156. Freight brakemen should report for duty at the appointed time and obey the following rules:

157. When necessary, they should assist in making up trains; look over the train carefully before starting, and know that all couplings, brakes, ladders, running boards and running gear are in good order. They should inspect the train as often as possible.

158. Brakemen should display prescribed signals at the rear of the train, and have all necessary supplies and signals at hand ready for immediate use.

159. Rear brakemen will consider it their especial duty to protect the rear of train in accordance with the rules, and should allow nothing to interfere with the prompt and efficient discharge of that duty. They should obey the signals of the engineman as prescribed by the rules; and should never wait for signal or orders from the conductor when train needs protection. The train should be watched carefully to see that it has not parted.

160. Brakemen should read all orders received by the conductor or engineman, and understand them.

161. The front brakeman should be on the lookout at all times for signals, both from the front and rear of train, and should watch for indications that train has parted. They should carefully observe all fixed signals, also persons walking across or on the track and inform the engineman.

162. Brakemen should learn the condition and grades of the division on which they are assigned, so that they can apply the brakes with judgment, and hold the train at all necessary points.

Engine House Foremen.

163. Engine house foremen have charge of the engine house and the workmen employed therein. It is their duty to see that the engine house is kept clean and in good order; that workmen perform their duties; that supplies are economically used; that engines are prepared for service promptly and are in good working order and properly equipped; that they are inspected, cleaned and reported for repairs when necessary; and that enginemen and firemen are ready for duty at the required time.

164. Engine house foremen should certify to enginemen's trip reports and know that the time of enginemen's arrival and departure is correctly registered.

165. When the netting of any engine is reported by track foreman to be inspected, it must be promptly done and a report thereof made to the proper officials. Such reports should be accompanied by the notification.

Supervision of Signals.

166. Supervisors of signals will be responsible for the safe condition and proper maintenance of all signals and interlocking plants in their districts. They should keep themselves informed of the condition of signals and interlocking plants; have necessary repairs made and promptly report defective condition to the proper officials.

167. Supervisors will employ, in the discharge of their work, such men as are necessary for the carrying out of the duties for which they are responsible.

168. Supervisors should see that their men are furnished with necessary supplies for the proper maintenance of signals and interlocking plants, and that such supplies are economically used.

All material, supplies and tools should be carefully inspected on receipt, to see that they are in accordance with specifications; they should be checked by invoice and properly distributed.

169. Supervisors should know that all foremen, maintainers and repairmen are provided with all rules, circulars, forms, and special instructions pertaining to their duties, and that they fully understand and comply with the same; they should ascertain that the men are thoroughly familiar, in so far as they may be affected, with the rules of the operating department.

170. Supervisors should give special attention to training the men under them, and know that they are familiar with and properly perform their duties.

171. Supervisors should conform to the prescribed standard and plans in the execution of the work under their charge, and will not permit experimental trials of appliances or devices not standard, nor give out information of the results of any trial except by proper authority.

172. Supervisors should keep general oversight of all work performed in their districts by contractors or others who do not come under their direct charge, and see that nothing is done by them that will interfere with the safety or movement of trains.

Signal Repairmen.

173. Repairmen and maintainers are responsible for the inspection, adjustment and proper maintenance of all the interlocking plants and signals assigned to their care.

174. Where the condition of switches or track does not admit of the proper operation or maintenance of the interlocking plants and signals it should be reported to the proper officials.

175. When any part of an interlocking plant is to be repaired a thorough understanding should first be had with the signalman, in order to secure the safe movement of trains and engines during repairs. The signalman should be notified when the repairs are completed.

176. If necessary to disconnect any switch it should be securely fastened before any train or engine is permitted to pass over it.

177. Alterations or additions to an interlocking plant should not be made unless properly authorized.

178. Repairmen when on duty, or subject to call, should keep the proper officials advised as to where they can be found, and respond promptly when called.

CHAPTER XVII.

EXAMINATIONS (QUESTIONS AND ANSWERS) FOR CONDUCTORS, ENGINEMEN, FIREMEN, SIGNALMEN AT INTERLOCKING PLANTS, TRAIN DISPATCHERS, AGENTS AND OPERATORS, BRAKEMEN AND BAGGAGEMEN, AND TRACK, BRIDGE AND BUILDING FOREMEN.

On all railroads it is the practice to examine applicants for employment in the operating department. The scope of such examinations will differ, of course, according to the varying conditions applying to each particular road such as, for instance, according as it may be single or double track, equipped with particular systems of signals and so on.

In regard to the physical qualifications of operatives manifestly an examination must be made; all employes having aught to do with the movement of trains and the observance of signals must be normal physically in certain respects such as sight, hearing, health, strength and so forth, and these facts must be certified to before they can take up any duties in connection with the operation of trains.

In regard to the questions and answers herein set forth it will not, it is needless to say, be sufficient to memorize the answers to the questions.

They are given simply as a help and guide. Those who conduct the examinations may ask questions in different forms to determine how well the person being examined understands the subject, so it is necessary that the full meaning of each answer be understood.

The intelligent and conscientious employe will make use of every avenue by which knowledge can be gained and will supplement this by close and intelligent observation.

It will always happen that conditions on different railroads will vary and that practices will differ in particular things. It is possible therefore that some of the answers herein given will not be applicable to particular roads or parts of roads though they will be to others. The answers given, however, will even in such cases serve to throw light on the subject and will not confound or mislead the intelligent student. It is not sought here to forestall personal research but to add to the desire to acquire knowledge by careful study and thought.

With these explanatory remarks the several examinations, questions and answers, for conductors, enginemen, firemen, signalmen at interlocking plants, train dispatchers, agents and operators, brakemen and baggagemen and track bridge and building foremen, relative to the handling of trains will be given in the order named.*

---

* In connection with each examination the employe is required to state: (1) Name in full. (2) Date of birth. (3) Where born. (4) Residence. (5) Married or single. (6) Name and address of person to be notified in case of injury or serious illness. He must also have filed a watch certificate and a record card.

CONDUCTOR'S EXAMINATION.

Q. 1—Do you understand that in accepting employment you assume its risks and that each employe is responsible for his own safety and must exercise care to avoid injury to others?

A. 1—Yes.

Q. 2—In case of doubt as to interpretation of any rule what would you do?

A. 2—I would apply to proper superior officer for explanation.

Q. 3—What is the rule in regard to the use of liquor and the frequenting of places where liquor is sold, and the use of tobacco?

A. 3—The use of liquor and the frequenting of places where it is sold is prohibited, and the use of tobacco in the vicinity of passenger stations and on passenger trains is not allowed.

Definitions.

Q. 4—What is a train?

A. 4—A train is an engine or more than one engine coupled, with or without cars, displaying markers.

Q. 5—What is a regular train?

A. 5—A regular train is a train represented on the time-table.

Q. 6—What is a section of a train?

A. 6—A section is one of two or more trains running on the same schedule.

Q. 7—What is an extra train and how is it designated?

A. 7—An extra train is one not represented on the time-table. It is designated as extra or work extra.

Q. 8—What is a superior train?

A. 8—A superior train is one having precedence over other trains.

Q. 9—How are right, class and direction conferred?

A. 9—Right is conferred by train order, class and direction by time-table.

Q. 10—Which is superior, right, class or direction?

A. 10—Right is superior to class or direction.

Q. 11—What is a train of superior right?

A. 11—A train given precedence by train order.

Q. 12—What is a train of superior class?

A. 12—A train given precedence by time-table.

Q. 13—What is a train of superior direction?

A. 13—A train given precedence in the direction specified in the time-table, as between trains of the same class.

Q. 14—What is a time-table?

A. 14—The authority for the movement of regular trains subject to the rules.

Q. 15—What is a schedule?

A. 15—That part of the time-table which prescribes the class, direction, number and movement of a regular train.

Q. 16—What is a pilot?

A. 16—A person assigned to a train when the engineman or conductor or both are not acquainted with the road.

Q. 17—What are his responsibilities?

A. 17—To see that the train is run in accordance with all rules and requirements.

Requirements.

Q. 18—How often is it necessary to compare your watch with standard clocks and what record do you make of same?

A. 18—Before starting on each trip on prescribed form.

Q. 19—After obtaining standard time what is the duty of Conductors and Enginemen before starting out on a run?

A. 19—Compare time with each other.

Q. 20—What is your duty when you do not have access to a standard clock?

A. 20—Obtain time from train dispatcher daily before commencing work.

Q. 21—What bearing has an old time-table after a new one takes effect?

A. 21—None whatever.

Q. 22—Give me your understanding of the rights and movements of trains when there is a change of time-table?

A. 22—When time changes a train on the road will retain its orders and run upon the schedule of the train of the same number of the new time-table.

Q. 23—Suppose the time-table placed you ahead of your old time, what would you do?

A. 23—I would assume the time of the new schedule and run late if necessary.

Q. 24—When can a new train that had no corresponding number on previous time-table run?

A. 24—When it is due to start from its initial point on a division after a time-table takes effect.

Q. 25—When only one time is shown on time-table for a train at any point what does it indicate?

A. 25—The leaving time.

Q. 26—Where there are two times shown on time-table what does it indicate?

A. 26—They are the arriving and leaving time.

Q. 27—How are meeting and passing points indicated on time-table?

A. 27—By full faced figures.

Q. 28—When both the arriving and leaving time are in full faced figures what is the meaning?

A. 28—It means that both times are meeting and passing times or when one or more trains are to be met or passed between those times.

Q. 29—Suppose your time is in heavy type at any junction, terminal, or end of double track, and you are unable to find any

other train of corresponding time at that point, what would it mean?

A. 29—It would mean that another train is scheduled at that point within 30 minutes of my time.

Q. 30—How long are special rules and regulations printed in a time-table in effect?

A. 30—Only during the life of a time-table.

Signal Rules.

Q. 31—What is the rule relative to providing yourself with proper signals and keeping them in good order?

A. 31—We are required to provide ourselves with all necessary signals, and to keep them in good order for immediate use.

Q. 32—Where should those giving signals station themselves?

A. 32—At a point where they can be easily seen.

Q. 33—What is necessary in case signal seen by you may be intended for other trains and what would you do if in doubt?

A. 33—I would not move until I had ascertained that the signal was meant for us.

Q. 34—What kind of signals are used by day and what by night?

A. 34—Flags by day and lights by night.

Q. 35—When should night signals be displayed and what exceptions, if any?

A. 35—From sunset to sunrise except in heavy weather when they should be displayed to suit conditions.

Visible Signals.

Q. 36—What are visible signals?

A. 36—Signals to be seen by the eye.

Q. 37—What does a red signal signify? Green? Blue? Green and white? Green and red?

A. 37—Stop, proceed, car repairers' signal, flag stop, proceed with caution.

Q. 38—If you found a combination of green and red flag, or green and red light, placed upon the side of track, what would you do?

A. 38—I would run slowly with train under control.

Q. 39—When a fusee is found burning on or near the track what does it indicate?

A. 39—It indicates stop.

Q. 40—What is the hand or lamp signal to stop? Proceed? Back? Train parted? Apply air brakes? Release air brakes?

A. 40—The hand or lamp swung across the track. Raised and lowered vertically. Swung in a short circle. Swung in a circle at arm's length. Swung horizontally at arm's length above the head. Held at arm's length above the head.

Q. 41—What is the meaning of any object waved violently by anyone on or near the track?

A. 41—It is a signal to stop.

Audible Signals.

Q. 42—What does one short blast of the whistle indicate? Two long? One long and three short? Four long? Five long? Three long? Two short? Three short? Four short? One long and two short? Two long and two short? One long?

A. 42—Apply brakes. Release brakes. Send out flagman. Flagman return from west or north. Flagman return from east or south. Train parted. Answer to any signal not otherwise provided for. Back. Call for signals. To call attention to signals carried. Public crossing whistle. Approaching stations, mail cranes, railway crossing, obscure curves, etc.

Q. 43—What does a succession of short blasts of the whistle mean?

A. 43—An alarm whistle for persons or stock on the track.

Q. 44—What does the explosion of one torpedo mean?

A. 44—It is a signal to stop.

Q. 45—What is the meaning of the explosion of two torpedoes not more than two hundred feet apart?

A. 45—It is a signal to reduce speed expecting to find some obstruction on the track.

Q. 46—What signals are given for the following: When brakes stick or wheels slide? When train is running to stop at once? When train is running to stop at next station? When train is standing to apply or release air brakes? When train is running to reduce speed? When train is standing to call in flagman? When train is running to increase speed?

A. 46—One long whistle. Two. Three. Four. Four. Five. Five.

Train Signals.

Q. 47—Where should headlight be displayed?

A. 47—To the front of the train.

Q. 48—When should it be concealed?

A. 48—When trains have stopped clear of main track and switches are closed.

Q. 49—When more than one train is to take siding when will engineman of leading engine conceal his headlight?

A. 49—When he has ascertained that train following is into clear.

Q. 50—What does a headlight mean when seen by an approaching train?

A. 50—That the train is occupying the main track.

Q. 51—What lights should yard engines display at night?

A. 51—A headlight to the front and rear.

Q. 52—When not provided with headlight at the rear what lights must switch engine display?

A. 52—A white light on each side and a red light in center.

Q. 53—What lights at night are to be carried by yard and light road engines on their tanks, when leaving alone?

A. 53—Engines moving without trains after dark will display a white light upon each side of rear end of tank, and in addition thereto a red light in the center of same. Yard engines will display the headlight to the front and rear. When yard engines are not provided with a headlight at the rear, two white lights must be displayed upon either side of rear end of tank, and in addition a red light in the center of same.

Q. 54—What signals are required on the rear of every train as markers by day and by night?

A. 54—By day a green flag at each side; by night a green light to the front on each side and a red light to the rear on each side.

Q. 55—How are these signals to be displayed when you get into clear on a siding to be met or passed by another train?

A. 55—Green lights must be displayed to the rear.

Q. 56—Suppose the siding is not long enough to hold your train, how would signals be displayed?

A. 56—They should be left to show red to the rear.

Q. 57—Will uncovered headlight or tail light relieve you from responsibility of protecting your train by flagman?

A. 57—No.

Q. 58—What is necessary when engine heads on cars on a siding to clear main track for passing train?

A. 58—To protect by flagman.

Q. 59—When should markers be removed after arrival of train at terminal?

A. 59—When trains are into clear and switches are closed.

Q. 60—What is the meaning of two green flags by day and in addition two green lights by night on front of engine?

A. 60—It means that a train is following that has precisely the same rights as that train carrying them.

Q. 61—What sections of a train display these signals?

A. 61—All except the last.

Q. 62—What is the duty of an engineer when carrying green signals?

A. 62—To call the attention of other trains met or passed to signals.

Q. 63—What response should be given?

A. 63—Two short blasts of the whistle.

Q. 64—If response is not given what should you do?

A. 64—Should stop to see that train understood what signals we are carrying.

Q. 65—What is the meaning of two white flags by day and in addition two white lights by night on the front of an engine?

A. 65—It means that the train carrying them is an extra.

Q. 66—When two or more engines are coupled together, which engine should display signals?

A. 66—The head engine.

Q. 67—What exceptions are there, if any?

A. 67—Helper engines should duplicate engine signals they are double heading.

Q. 68—What does one flag or light displayed on the front of an engine indicate?

A. 68—The same as two.

Q. 69—When cars are pushed by an engine, except when switching or making up trains in yards, what is necessary by night?

A. 69—A white light must be displayed on the head of the leading car.

Q. 70—How must each car in a passenger train be connected with engine by signal appliances?

A. 70—They should be connected by communicating signal.

Q. 71—What does a blue flag or a blue light indicate?

A. 71—It means that men are at work under or about cars on that track.

Q. 72—What is your duty when blue signal is displayed?

A. 72—Should not couple to or move cars.

Q. 73—How about placing cars in front of blue signal?

A. 73—It should not be done without notifying the men who are working on the cars.

Q. 74—What is the meaning of a signal improperly displayed or the absence of a signal where one is usually shown?

A. 74—It must be regarded as a danger signal.

Q. 75—What signal is used to stop a train for passengers at a flag station?

A. 75—A combination of green and white lights.

Q. 76—Should this signal be used for any other purpose?

A. 76—No.

Q. 77—When a signal, except a fixed signal, is given to stop a train, should it be acknowledged?

A. 77—Yes.

Classification and Movement of Trains.

Q. 78—How are trains classified?

A. 78—First, Second and Third.

Q. 79—Which is superior?

A. 79—Trains of the first class are superior to those of the second; trains of the second are superior of those of the third.

Q. 80—At meeting points between extra trains which is superior?

A. 80—The train moving in the direction to which regular trains are superior is the superior train.

Q. 81—When do regular trains lose their right and class?

A. 81—When they are twelve hours behind this schedule.

Q. 82—How can they proceed after losing their right?

A. 82—By train order only.

Q. 83—What is necessary for a conductor and engineman to know before leaving an initial station or junction or before passing from double to single track?

A. 83—To ascertain whether or not trains of the same or superior class have arrived and departed.

Q. 84—How will this information be furnished enginemen and by whom?

A. 84—The conductors will furnish enginemen with registry blanks.

Q. 85—To which side will trains keep when running on double track?

A. 85—To the right (or as the case may be).

Q. 86—When more than two tracks how will you be governed?

A. 86—They will run under special regulations.

Q. 87—What would a train do that is about to leave its initial station, or a junction, when a train of the same class, in the same direction is overdue?

A. 87—It would proceed on its own schedule.

Q. 88—What is necessary before a train can be started?

A. 88—A signal from the conductor.

Q. 89—How much must an inferior train clear the time of a superior train in the same direction?

A. 89—Ten minutes.

Q. 90—How would you be governed in case you were unable to clear the main track by the time specified?

A. 90—I would protect myself as per rule.

Q. 91—How much will you clear the time of a superior train of the same class, in the opposite direction?

A. 91—Five minutes.

Q. 92—Which end of siding must a train take?

A. 92—At the first switch.

Q. 93—Are there any exceptions?

A. 93—Only when authorized by train order to pull by and back in.

Q. 94—If you were on an inferior train how much would you clear the time of a train of superior class, at meeting point other than made by train orders?

A. 94—Five minutes.

Q. 95—If you are on a superior train and are on time and a train of the same class fails to make a scheduled meeting point, what time would you leave?

A. 95—On time.

Q. 96—When trains meet is it necessary that they inform each other what train they are, and how is this done?

A. 96—Yes. It is done by word of the mouth.

Q. 97—How far apart should trains moving in the same direction keep, except in districts controlled by block signals?

A. 97—Ten minutes.

Q. 98—When is a train due to arrive at a station?

A. 98—When it is due to leave the preceding station.

Q. 99—Can a train leave a station in advance of its scheduled time?

A. 99—No.

Q. 100—Can a train arrive at a station in advance of its scheduled time?

A. 100—Yes.

Q. 101—If on a regular train you are delayed and fall back on the time of another train of the same class, how would you proceed?

A. 101—I would proceed on my own schedule.

Q. 102—If you should overtake a train of the same class, so disabled that it would delay you to follow them, how would you be governed and what report would you make?

A. 102—I would pass the train and report the matter to the train dispatcher at the next station.

Q. 103—If you should overtake a train of superior class, which was disabled, what would you do?

A. 103—Would pass the train and if necessary would assume its schedule and take their train orders and report the matter to the train dispatcher at next office.

Q. 104—What would the disabled train do?

A. 104—It would proceed on my schedule and exchange orders.

Q. 105—By whose authority will a train display signals for a following section or run as an extra?

A. 105—By orders from the train dispatcher.

Q. 106—What class of trains are not permitted to run as following section to a passenger train?

A. 106—Freight trains and light engines.

Q. 107—When signals for a following train are taken in at any point before following section arrives, what is the duty of conductor?

A. 107—To notify the operator or agent in writing.

Q. 108—What would you do if there was no operator?

A. 108—Would leave a flagman there to notify all opposing trains.

Q. 109—What is required of you if you meet any train between the point at which signals are taken in and your next registering station?

A. 109—Would notify the train about the signals I had carried.

Q. 110—What is required of train approaching terminal, end of double track, junctions, railroad crossing at grade, and drawbridges?

A. 110—They should approach such points prepared to stop.

Q. 111—Where required by rule or law to stop do you understand that this means a full stop?

A. 111—Yes.

Q. 112—To what speed are passenger and freight trains limited in passing over Interlocking Switches?

A. 112—Passenger trains 25 miles per hour; freight trains 15 miles per hour.

Q. 113—Under what circumstances are you permitted to occupy main track between yard limit boards?

A. 113—Under protection of a flagman.

Q. 114—How should extra trains approach points at which yard limit boards are erected?

A. 114—Under full control, expecting to find the main track occupied.

Q. 115—In districts other than those controlled by telegraph block system, what is the rule in regard to passing open telegraph stations at which train order signal is not displayed?

A. 115—We must not pass without a clearance.

Q. 116—What information is given on a clearance?

A. 116—It shows that no orders have been received for us.

Q. 117—What information is given on a release?

A. 117—It shows that the signal is displayed for some other train or the block.

Q. 118—How are regular freight trains, extras and work extras required to approach all stations, water tanks, coal sheds, and obscured side tracks?

A. 118—With train under control.

Q. 119—How far back should train and enginemen prepare to bring their train under control?

A. 119—One mile.

Q. 120—When a train stops between stations, or is delayed under circumstances by which it may be overtaken by another train, what is your first duty?

A. 120—To send back flagman.

Q. 121—What signals must flagman take?

A. 121—Two torpedoes, a red flag by day and a red and white lantern and two fusees by night.

Q. 122—At night what is his first duty after leaving rear of train?

A. 122—To place a fusee 500 feet from rear of train.

Q. 123—At what rate should he go and how far?

A. 123—As fast as he can go three-fourths of a mile.

Q. 124—How far should he have an unobstructed view of approaching train?

A. 124—One-quarter of a mile.

Q. 125—When the required distance is reached how should torpedoes be placed?

A. 125—He should place one torpedo on engineman's side.

Q. 126—How long will he remain there?

A. 126—Until recalled or until following train arrives and stops.

Q. 127—When flagman is recalled what precautions are necessary?

A. 127—He will place another torpedo two hundred feet nearer his train than the first and return as fast as possible to his train. If train is not standing where track is straight for one-fourth of a

mile to the rear it should be moved slowly ahead until a clear view can be had for that distance.

Q. 128—Who is responsible for the proper protection of train?

A. 128—The conductor.

Q. 129—What precautions are necessary for the front end of your train in case such protection becomes necessary?

A. 129—The same as those taken at the rear end.

Q. 130—Who is responsible for protecting head end?

A. 130—The conductor.

Q. 131—Should the speed of your train be so reduced that it will check the speed of a following train, before flagman can get back the required distance, what precaution would you take?

A. 131—A red fusee should be placed upon the track.

Q. 132—What is necessary before a train can be backed on the main track?

A. 132—A flagman should be sent far enough in advance to insure protection.

Q. 133—When a flagman goes back to protect the rear of his train who takes his place?

A. 133—The head brakeman or baggageman.

Q. 134—When a train breaks in two while in motion what is the duty of all concerned?

A. 134—To give signals and to use every precaution to prevent collision of the detached parts.

Q. 135—What signals should engineer give and how often should they be repeated?

A. 135—He should give the "Break-in-Two" signal and repeat until answered.

Q. 136—How long should the front portion of train be kept in motion?

A. 136—Until rear portion has stopped.

Q. 137—If you should overtake the rear portion of train which had broken in two are you permitted by the rules to move same?

A. 137—No.

Q. 138—Are there any exceptions?

A. 138—There are no exceptions.

Q. 139—What should be done with the forward portion of the train in all cases where practicable?

A. 139—It should be sidetracked.

Q. 140—Should the engine, with cars attached, return for the rear portion until it is ascertained positively that the rear portion has stopped?

A. 140—No.

Q. 141—When backing up for rear portion what precautions are necessary?

A. 141—A flagman should be sent far enough in advance to prevent collision of the two parts.

Q. 142—Would you consider it necessary to examine the draft rigging on the rear car before backing up?

A. 142—Yes.

Q. 143—When cars are pushed by an engine, except when shifting and making up trains in yards, what protection should be given same?

A. 143—A flagman should be stationed on the front of the leading car.

Q. 144—What is required when switching over highway, street, and railway crossings, where not protected?

A. 144—A man must be stationed at the crossing to act as flagman.

Q. 145—What about moving cars over highway crossings and in front of passenger stations detached from engine?

A. 145—It is not permitted.

Q. 146—What is necessary when switching cars containing passengers?

A. 146—They must be coupled to engine and air cut in.

Q. 147—In what form should instructions regarding the movement of trains, condition of bridges or track be given?

A. 147—In train order form.

Q. 148—Who is responsible for the position of switches used by trainmen?

A. 148—Conductor.

Q. 149—Can a switch be left open for a following train; if so, under what circumstances?

A. 149—Not unless a trainman from the following train is left in charge of it.

Q. 150—What is your duty when necessary to use a switch that is protected by distant signal, and the distant signal cannot be seen from the switch?

A. 150—The signal must first be set at danger, we should then wait until satisfied that no train is approaching between distant signal and switch.

Q. 151—At meeting or passing point where will party employed attending switch station himself after locking same?

A. 151—Not less than thirty feet from switch.

Q. 152—What precaution is required of train approaching station where passenger trains are due or past due?

A. 152—They should approach under full control.

Q. 153—What about pulling into a station on a double track, at which a passenger train in the opposite direction is standing or pulling into?

A. 153—They must not pull into a station until the train has started up and the rear end of same has passed the platform.

Q. 154—What about two trains approaching a station,, from opposite directions, at which only one is scheduled to stop?

A. 154—The train scheduled to stop should reduce speed and allow the other trains to pass before stopping at the station.

Q. 155—When two trains going in opposite directions, both being scheduled to stop, which train has preference to the platform?

A. 155—The superior train.

Q. 156—What is your duty in regard to handling passengers on freight train and stopping at platform to receive and discharge them?

A. 156—To see that stations are properly announced and that caboose is stopped at station platform.

Q. 157—What about announcing station on train and announcements at station?

A. 157—The caboose must be brought back to station platform and departure of train announced in waiting rooms and on platform.

Q. 158—Whose duty is it to know that trains are properly supplied with tools, appliances and signals.

A. 158—The conductor's.

Q. 159—In case you discover any damage to track, bridges or culverts or anything likely to cause accident to a following train, what is required of you?

A. 159—Would leave a flagman to protect same; call section foreman and notify train dispatcher.

Q. 160—Do you understand that every care must be taken to prevent the killing of live stock?

A. 160—Yes.

Q. 161—When live stock is killed what is required?

A. 161—To make report of same on required form.

Q. 162—What is your duty in regard to the consultation of bulletin boards?

A. 162—We are required to consult them before leaving on each trip.

Q. 163—How will you determine the location of bulletin boards?

A. 163—By the division time table.

Q. 164—Are you held accountable for all bulletins posted prior to your departure?

A. 164—Yes.

Q. 165—What is expected of you when you find fires on or near the right of way, that are likely to cause damage to property?

A. 165—To notify train dispatcher and section foreman.

Q. 166—What is your duty when you discover fences down, stock on the right of way, or telegraph line down?

A. 166—Would notify the first section crew and advise train dispatcher by wire.

Q. 167—What is your duty when switches are found misplaced?

A. 167—To report same to train dispatcher.

Q. 168—Who are responsible for the safety of a train?

A. 168—Conductors and enginemen.

Q. 169—In case of doubt or uncertainty what is required?

A. 169—Would adopt the safe course and would not proceed until all doubt was removed.

Rules for Train Movement by Order.

Q. 170—What about accepting orders with erasures, alterations or interlineations?

A. 170—They must not be accepted.

Q. 171—To whom should train orders be addressed?

A. 171—To those who are to execute them.

Q. 172—Who should receive a copy?

A. 172—Conductors and enginemen and those acting as pilots.

Q. 173—How are regular trains designated in train orders?

A. 173—By train numbers, engine numbers and conductor's name.

Q. 174—How are extra trains designated?

A. 174—By engine numbers and conductor's name.

Q. 175—How must time be written in train orders?

A. 175—It must be written in words and duplicated in figures.

Q. 176—What is your first duty on arriving at a station at which orders have been received for you?

A. 176—To go to the telegraph office, read the order aloud and if understood, sign it.

Q. 177—What is necessary to make a train order valid so you can use it?

A. 177—O. K. the time and the train dispatcher's initials.

Q. 178—To whom should you make delivery?

A. 178—To the engineman.

Q. 179—What is required of engineman when order is delivered to him?

A. 179—To read it aloud to me.

Q. 180—What is your understanding of an intermediate order?

A. 180—An order sent to an operator at actual meeting point. It should be signed by the operator and delivered to the first train mentioned in same arriving at his station.

Q. 181—To whom should you show all orders?

A. 181—To rear brakeman.

Q. 182—How should an order be addressed that is to be delivered to a train at a non-telegraph station by another train?

A. 182—It must be addressed to C & E. No. —— at —— Care of ——..

Q. 183—To whom should it be delivered?

A. 183—To the conductor of the train that is to carry it.

Q. 184—What is the duty of a conductor when making delivery of such order?

A. 184—He must procure signature of conductor and engineman of train receiving order.

Q. 185—After receiving the signature of conductor at non-telegraph station, to whom will conductor carry and deliver said order?

A. 185—To operator at first telegraph station.

Q. 186—When a train is named in an order are all of its sections included; and is it necessary that each particular section be specified?

A. 186—All its sections are included and it is not necessary that each particular section be specified.

Q. 187—Can any part of a train order specifying a particular movement be changed without altering balance of order?

A. 187—Yes.

Q. 188—When do train orders held by a regular train become void?

A. 189—When a train becomes twelve hours late.

Q. 189—What is necessary in case engineman or conductor change before completion of trip?

A. 189—They must exchange orders and conductor and engineman must compare time.

Q. 190—What is a conductor required to receive before leaving a terminal?

A. 190—A clearance, release or train order.

Q. 191—Explain the position of the Nun and Semaphore train order signals when at "Stop" and "Proceed"?

A. 191—The NUN signal will show a red board or light when at danger, and no board or a green light when clear. A semaphore signal will display a horizontal arm at the right of the mast, or red light when at danger, or a diagonal or vertical arm at the right of the mast, or a green or white light when clear.

Q. 192—What is required in regard to examining train before starting a run, and at all stopping points?

A. 192—They must examine their trains when practicable to see that everything is in good order.

Q. 193—What is required of you relative to examining all tools, brakes and ladders that you are to use, and what is to be done when found out of order?

A. 193—I would caution all train employes to look out for the defect and call attention of car inspector at terminal.

Q. 194—Where should cars containing live stock be located in train when practicable?

A. 194—Next to caboose.

Q. 195—What about moving cars of live stock when not properly secured?

A. 195—They must not be moved until properly secured.

Q. 196—Where should freight brakemen be stationed approaching all stations?

A. 196—On top of train.

Q. 197—Whose duty is it to see that they are on top?

A. 197—The conductor's.

Q. 198—What are the instructions relative to switching cars that parties are loading or unloading?

A. 198—They must not be moved until parties have been notified.

Q. 199—What is required when placing cars on side track?

A. 199—They must be properly secured and clear of main line and highway crossings.

Q. 200—What about cutting off engine from cars before rear part of train has stopped?

A. 200—It is not allowed.

Q. 201—Whose attention should be called to bad order cars?

A. 201—Car repairer and agents.

Q. 202—What is required when cars are set out in bad order, and what notation, if any, would you make on way bill?

A. 202—The train dispatcher should be notified and notation made on the way bill stating what defects are.

Q. 203—What should be done with any of the equipment of a car when detached?

A. 203—It must be loaded in car when practicable.

Q. 204—What are the duties of passenger brakemen in regard to announcing the next stop and how should it be done?

A. 204—He must pass through car from front to rear and make two announcements.

Q. 205—What about brakemen announcing stops for draw-bridges, railroad crossings, etc.?

A. 205—It must be done.

Q. 206—What about brakemen announcing change of cars at junction points?

A. 206—He must announce such changes.

Q. 207—What is required of passenger conductors relative to obtaining names and addresses of all passengers on their train when accident occurs?

A. 207—It must be done.

Q. 208—Is this required when passengers are not injured?

A. 208—Yes.

Q. 209—In case it becomes necessary to eject any person from a train at what point should it be done, and what amount of force should be used?

A. 209—He should be ejected at a regular open station and no force sufficient to injure party should be used.

Q. 210—What would you do with a passenger who refuses to produce transportation?

A. 210—Would remove him from train at regular open station.

Q. 211—What about procuring names and addresses of witnesses to the ejection of a passenger?

A. 211—Would secure the names and addresses of parties who witnessed same.

Q. 212—Suppose the offender is infirm, and unable to care for himself, how would you be governed?

A. 212—Would use judgment in such cases, would not eject the passenger unless I was satisfied no harm would be done to him by leaving him in charge of an agent.

Q. 213—Where must freight cars be placed when hauled in passenger train and how should they be equipped?

A. 213—They must be placed next to engine and equipped with air brakes.

Q. 214—What is the rule in regard to passenger trains being moved to take coal or water, or to do other work, after stop has been made at platform?

A. 214—It must not be done.

Q. 215—From whom must consent be obtained before conductor can change off before completion of run?

A. 215—The train dispatcher.

Q. 216—How should turn tables be left after using?

A. 216—They must be locked.

Q. 217—When turn tables are found unlocked what should be done?

A. 217—Report should be made to Superintendent.

Q. 218—Where in train should empty flats and tanks be hauled?

A. 218—In the rear of train.

Q. 219—What is the rule in regard to detaching engines from freight trains of over twenty cars when taking coal or water?

A. 219—They should be detached.

Q. 220—How should more than one dead engine in a train be hauled?

A. 220—They must have at least three box or stock cars placed between them.

Q. 221—What is the rule in regard to hauling dead engines without side rods?

A. 221—It must not be done without authority from the Superintendent.

Q. 222—To what speed is train limited when hauling dead engines without side rods?

A. 222—Fifteen miles per hour.

Q. 223—What report should conductor make when train breaks in two?

A. 223—He should report to Superintendent giving date, train, car numbers, point at which train parted, make of couplers and should show defects, if any.

Q. 224—What is necessary before receiving a corpse for transportation?

A. 224—It must be accompanied by a physician's certificate or a certificate of inquest from coroner, or a permit for transportation from Clerk of Board of Health, and also a certificate from the undertaker showing that the person did not die of a contagious disease.

Q. 225—What is the rule in regard to accepting a corpse that has been infected with a contagious disease or has become offensive.

A. 225—It must not be received.

Q. 226—What is required when you have freight for a station at which there is no agent?

A. 226—When practicable receipt should be taken from consignee for the freight on the way-bill, and the way-bill should be left at the first station at which there is an agent. If no one

there to receive, would leave it at the next station where there is an agent.

Q. 227—What is to be done by a conductor when freight is consigned "To order," or "Notify," or "To be delivered only on surrender of bill of lading"?

A. 227—It must be taken to the first station where there is an agent.

Q. 228—When property is received at a station where there is no agent how should it be handled?

A. 228—It must be accompanied by full shipping directions, in writing and billed for next station.

Q. 229—When refrigerators are not in train for which they are scheduled what will conductor do?

A. 229—Notify the train dispatcher.

Q. 230—Should conductor examine bunkers in refrigerators and what will he do if there is not sufficient ice in car to carry it to destination?

A. 230—Yes, if car needs re-icing they will notify train dispatcher and agent at first terminal.

Q. 231—From whom will authority be obtained before causing the arrest of any person?

A. 231—The Law or Claim Department.

Q. 232—At what distance should freight and other material be piled from the track?

A. 232—At least six feet.

Q. 233—What is required when you are overtaken by severe storms or indication of high water, and to whom would you make report?

A. 233—Must run with caution and report to train dispatcher.

Q. 234—What are the instructions relative to speed of trains during extreme cold weather?

A. 234—They must not exceed their schedule speed.

Q. 235—When following another train that is carrying passengers what is necessary when approaching station at which such other train has stopped?

A. 235—Must approach stations prepared to stop.

Q. 236—When an accident happens to any train carrying passengers what is required of conductors?

A. 236—Must procure the name and address of every passenger and ascertain whether or not they are injured, and should give all of his attention to injured passengers.

Q. 237—Is it necessary that you ask each passenger whether or not they are injured?

A. 237—Yes.

Q. 238—From whom should you obtain a written report of their own injuries?

A. 238—Employes.

Telegraph Block Signals.

Q. 239—What do block signals control?

A. 239—The use of certain blocks.

Q. 240—Do they affect the movement of trains under time table or train rules?

A. 240—No.

Q. 241—Do you consider that a block signal relieves you in any way from protecting your train by flagman?

A. 241—No.

Q. 242—Explain the position of block signal when "Clear" and at "Stop"?

A. 242—When at "Clear" block signal will show a diagonal or vertical arm by day, and a green or white light at night. When at "danger" a horizontal arm by day, or a red light at night.

Q. 243—When signal is clear to what point does it give you a clear track?

A. 243—To the outer approaching switch at the next station.

Q. 244—What is meant by the outer approaching switch at station?

A. 244—The first switch reached.

Q. 245—Do block signals control trains standing on side track?

A. 245—No.

Q. 246—What authority is necessary before train on side track can proceed?

A. 246—Authority from the signalman.

Q. 247—Of what does such authority consist?

A. 247—A caution card and release, a release stamped "Block is Clear," a train order stamped "Block is Clear" or train orders and a caution card.

Q. 248—How must trains moving under caution card expect to find main track?

A. 248—Occupied in that block.

Q. 249—When two or more trains coupled together enter a block when can they be uncoupled and what is your duty?

A. 249—Only at a block station and signalman to be notified.

Q. 250—What is necessary before train crosses from one main track to another?

A. 250—A cross-over permit.

Q. 251—After clearing a block what are instructions relative to re-entering or backing into same?

A. 251—Must not back within 300 feet of the block without authority from the signalman.

Q. 252—How long are trainmen required to watch block signal to see that position does not change?

A. 252—Until the entire train has passed.

Q. 253—If you came to a block signal where a signalman is regularly employed and found no signalman there what would you do?

A. 253—Would wait ten minutes, then proceed to the next block station, and report the fact to the train dispatcher. This applies to an intermediate station where there are no sidings.

Q. 254—When parted train has been recoupled who must conductor notify?

A. 254—The signalman.

Q. 255—Will hand signals be accepted against block signals?

A. 255—No.

Q. 256—What is required of conductor when track is obstructed between block stations?

A. 256—Conductor should notify the nearest block signalman.

Q. 257—Upon entering a siding at a block station what notice is required of conductor to signalman when train is clear of main track and switch is locked?

A. 257—He must personally notify the signalman that train is clear of main track.

Q. 258—What is an intermediate siding?

A. 258—A side track between two open block stations.

Q. 259—What is required of an inferior train accepting a clear signal, intending to proceed to next block station on its right, but which through delay cannot reach such station, and an intermediate siding is located between blocks? What is required of a superior train?

A. 259—They must take the intermediate siding, or if unable to reach same they should protect themselves with flagman. The superior train would proceed by authority of caution card.

Q. 260—What form of release is required where two trains are scheduled to meet at an intermediate siding?

A. 260—A release showing that train order signal is displayed for these two trains to meet at the intermediate siding.

Q. 261—If the inferior train fails to make the meeting point how will the superior train be governed?

A. 261—It will proceed on its time table rights and the same as on caution card.

Q. 262—When two trains meet by special order at an intermediate siding what is necessary besides the order before entering the block?

A. 262—A release stating that signal is displayed for such trains to meet at the intermediate siding.

Ten Minute Block.

Q. 263—In districts not controlled by telegraph block how far apart must trains in the same direction keep?

A. 263—Ten minutes.

Q. 264—If you are passed by any train at an intermediate siding how long would you wait before proceeding?

A. 264—Ten minutes.

Definitions.

Q. 265—Define a block?

A. 265—A length of track of stated limits, controlled by a block signal.

Q. 266—A positive block?
A. 266—One in which only one train is allowed at a time.
Q. 267—A permissive block?
A. 267—One in which two or more trains are allowed.
Q. 268—A block station?
A. 268—A place from which block signals are operated.
Q. 269—A block signal?
A. 269—A fixed signal controlling the use of a block.
Q. 270—A home block signal?
A. 270—A fixed signal at the entrance of a block to control trains entering same.
Q. 271—A distant signal?
A. 271—A fixed signal used in connection with the Home signal to indicate that the Home signal may be at "Stop" when the distant signal is at "Caution" or that the Home signal is clear when the distant signal is clear.
Q. 272—An advance block signal?
A. 272—A fixed signal used in connection with a Home block signal to sub-divide the block in advance.
Q. 273—What is a block system?
A. 273—A series of consecutive blocks.
Q. 274—A telegraph block system?
A. 274—A block system in which the signals are operated manually upon information by telegraph.
Q. 275—A controlled manual block system?
A. 275—A block system in which the signals are operated manually and so constructed as to require the co-operation of the signalman at both ends of the block to display a clear signal.
Q. 276—What is an automatic block system?
A. 276—A block system in which the signals are operated by electric, pneumatic or other agency actuated by a train or by certain conditions affecting the use of the block.

Signals Used in Automatic Block.

Q. 277—What signals are used in connection with the automatic block system?
A. 277—Either the semaphore or the enclosed disc.
Q. 278—How are the signal indications given by day and by night?
A. 278—By two or three positions of the semaphore arm, or by two positions of the disc, by day, and at night by the use of lights of prescribed colors.
Q. 279—Explain where you would look for these signals on single, double and three tracks?
A. 279—Over or upon the right of the track to which they refer, and on double track to the left of the track to which they refer, for one or two tracks the signals may be attached to the same mast. For three tracks, usually over the running track.

Q. 280—When these signals are located on bracket posts what signal would you read for the track on which you are running?

A. 280—The signal on the right hand mast refers to the track furthest to the right, the next signal to the left refers to the next track to the left and so on.

Q. 281—To what side of the signal mast are semaphore arms displayed as seen from an approaching train?

A. 281—To the right of the mast.

Q. 282—What would a distant block signal set at caution indicate?

A. 282—A distant block signal indicates the position of the Home signal ahead.

Q. 283—When the indicator disc is visible at a main track switch what would it indicate?

A. 283—It would indicate that the head of an approaching train had reached a point within 1,000 feet in advance of the block signal protecting the switch.

Q. 284—By what signal are the indications for the main running track given?

A. 284—By a high Home signal.

Q. 285—In what direction do even numbered signals govern?

A. 285—South or East.

Q. 286—Odd numbered signals?

A. 286—North or West.

Q. 287—Where a semaphore signal is used where are the arms displayed and how many positions are there?

A. 287—To the right of the mast. There are three positions.

Q. 288—What are the night indications?

A. 288—At night the semaphore signal will show a green or white light for clear, and a red light when at danger.

Q. 289—Where signal disc is used how are the indications given?

A. 289—By the positions of the disc.

Q. 290—How at night?

A. 290—By lights of prescribed colors.

Q. 291—What is the "Stop" and "Proceed" signal on a Home Semaphore by day and by night?

A. 291—When at "stop" it will show a horizontal arm to the right or the left of the mast, and at night a red light. When "clear" it will show a diagonal or vertical arm by day, and a green or white light by night.

Q. 292—Where two signals are displayed from the same mast what does the upper arm indicate?

A. 292—The upper one is the Home block signal for the block in advance.

Q. 293—What does the lower arm indicate?

A. 293—It is the distant signal for the second block in advance.

Q. 294—What is a caution signal on a Distant Semaphore signal?

A. 294—The arm displayed in the horizontal position by day, and at night a green, or yellow, or green and red light.

Q. 295—What is a clear Signal on a Distant Semaphore Signal?

A. 295—The arm displayed diagonally or vertically, and at night a green or white light.

Q. 296—What is a Stop signal on a Home Disc signal by day and by night?

A. 296—A red disc and at night a red light.

Q. 297—What is a Clear signal on a Home Disc signal by day and by night?

A. 297—The red disc withdrawn from view, and at night a green or white light.

Q. 298—What is the Caution signal on a Distant Disc signal by day and by night?

A. 298—A green disc with a white cross on its face by day, or a yellow, or green, or red and green light at night.

Q. 299—What does such Caution signal mean?

A. 299—To proceed with caution to the Home signal.

Q. 300—What is a "Clear" signal on a Distant Disc signal?

A. 300—The disc withdrawn from view, and at night a green or white light.

Q. 301—When a train is stopped by an automatic block signal when may it proceed and how will it run?

A. 301—On double track when the signal is cleared, or after waiting one minute, train may proceed, prepared to stop short of any obstruction in the block until the next signal is reached. On single track when the signal is cleared, or after waiting five minutes, train may follow a flagman through the block.

Q. 302—What is the indication when a signal is out of service and how will you proceed?

A. 302—The arm will be removed, the number plate will be hidden, or the condition of the signal will be otherwise designated. Would proceed with caution to the next signal.

Q. 303—What is necessary when you find a signal out of order?

A. 303—Would notify Superintendent.

Q. 304—When a Home signal indicates "Stop" what does it mean?

A. 304—It indicates that the block is occupied, that a switch is wrong in the block, that a car is afoul of the main track, that a part of the track has been destroyed or impaired, or that the signal apparatus is out of order.

Q. 305—If you desire to pass from a side track to the main track and you find a red disc visible in the indicator box what would you do?

A. 305—Would not open switch until red disc disappeared from view.

Q. 306—Can a switch be opened to permit a train to mo-

from the main to a side track when the red disc is visible in the indicator box at the switch?

A. 306—Yes.

Signals of Interlocking Plants.

Q. 307—What is a high signal?

A. 307—A signal supported on a mast 20 feet or more high.

Q. 308—A mast?

A. 308—An upright to which signals are attached.

Q. 309—A home signal?

A. 309—A fixed signal at which trains are required to stop when the route is not clear.

Q. 310—A distant signal?

A. 310—A fixed signal used in connection with the Home signal to indicate that the Home signal may be at "Stop" when the distant signal is at "Caution" or that the Home signal is at "Clear" when the distant signal is "Clear."

Q. 311—A dwarf signal?

A. 311—A low Home signal.

Q. 312—What signal is used at interlocking plants?

A. 312—The Semaphore signal.

Q. 313—How are the indications given by day and by night?

A. 313—By semaphore arms by day and lights of prescribed color by night.

Q. 314—Where are these signals located on single, double and three tracks?

A. 314—On single track they are either over or to the right of the track to which they refer, on double track they are located to the left of the track to which they refer, on three tracks usually over the running track.

Q. 315—To what side of the mast are the arms displayed as seen from an approaching train?

A. 315—To the right.

Q. 316—Explain the position of signal on bracket posts and what track they control?

A. 316—The signals on the right hand mast refer to the track furthest to the right; the signals on the next mast to the left refer to the next track to the left and so on.

Q. 317—When the train service on one main track is superior to that of another how will the signals be displayed?

A. 317—The signals for the superior track will be placed six feet higher than those for the inferior track.

Q. 318—By what will the indication for main running track in the established direction be given?

A. 318—Home signal.

Q. 319—At junction points where two signals are located on the same mast what route will the top signal govern?

A. 319—The superior route.

Q. 320—What is the indication for a diverging movement

from the main running track in the established direction to a secondary or side track?

A. 320—By a dwarf signal.

Q. 321—Where will the dwarf signal be located?

A. 321—To the right of the track to which it refers, and either at the foot of or opposite the high Home signal.

Q. 322—How will the dwarf signal show to indicate a diverging movement?

A. 322—It will show either a diagonal or vertical arm, or a green or white light.

Q. 323—How will the high Home signal show?

A. 323—It will indicate "Stop."

Q. 324—By what signal will the indication for a reverse movement from the established direction on or from a main running track, or for a movement to or from a side track in either direction be given?

A. 324—By a dwarf signal.

Q. 325—What does a Home signal in a horizontal position or a red light by night denote?

A. 325—Stop.

Q. 326—What does it mean when the arm is inclined diagonally or vertically upward or downward, or a green or white light is shown?

A. 326—Proceed.

Q. 327—What does it mean when the distant signal is in a horizontal position and a yellow or green, or green and red light is shown?

A. 327—It would indicate that the Home signal may be at danger and train should proceed with caution prepared to stop before Home signal is reached.

Q. 328—What does it indicate when the distant signal is in a diagonal or vertical position, or a green or white light is shown?

A. 328—It means the Home signal is at clear.

Q. 329—When a signal indicates "Stop" where must engine be stopped?

A. 329—Before signal is passed.

Q. 330—If after receiving a "Clear" signal the semaphore is placed in the "Stop" position what should be done?

A. 330—Train should stop at once.

Q. 331—What report should be made of same?

A. 331—It should be reported to the Superintendent.

Q. 332—In case you experience an unusual delay at an interlocking plant what report should be made of same?

A. 332—Report should be made to the Superintendent.

Train Orders.

Q. 333—If you are on No. 1 and receive the following order: "No. one (1) eng. 205 Smith will meet No. two (2) eng. 35 Brown at Bombay," what would you do?

A. 333—Would go to Bombay and wait indefinitely for No. 2.

Q. 334—If Nos. 1 and 2 are of the same class which train will take the siding?

A. 334—No. 1.

Q. 335—If you are on Extra 95 and receive the following order: "No. five (5) eng. 176, White, will meet Extra 95 East, Phillips at Hong Kong," what would you do?

A. 335—Would proceed to Hong Kong and wait indefinitely for No. 5.

Q. 336—If you were on No. 5 what would you do?

A. 336—Would wait at Hong Kong until extra 95 arrived.

Q. 337—Has a train of superior class any right whatever to pass a point at which it has a meeting point made by train order with any train until such train has arrived?

A. 337—None whatever.

Q. 337a—If you were on No. 5 and received the following order: "No. five (5) eng. 100, Jones, will pass No. nine (9), eng. 305, Wilson, at Madrid," what would you do?

A. 337a—Would proceed to Madrid and pass No. 9 at that point.

Q. 337b—If on No. 9 what would you do?

A. 337b—On arrival at Madrid would arrange to let No. 5 pass with the least possible delay.

Q. 338—If you were on Extra 200, and received an order reading as follows: "Extra 200 East, Thomas, will run ahead of No. ten (10), eng. 130, Mills, Berlin to Paris, and pass No. six (6), eng. 175, Thompson, at London," what would you do?

A. 338—Would run from Berlin to Paris ahead of No. 10 and on arrival at London would pass No. 6.

Q. 339—If on No. 10 what would you do?

A. 339—Would arrange for extra to pass at Berlin and follow under the rules.

Q. 339a—If you were on No. 6, what would you do?

A. 339a—Would proceed to London and arrange to let extra 200 pass there.

Q. 340—Suppose you were on No. 1 and received an order reading as follows: what would you do: "No. one (1), eng. 130, Palmer, has right over No. two (2), eng. 85, Bates, Chicago to St. Louis?"

A. 340—Would proceed to St. Louis on my schedule time, keeping lookout for No. 2 at each station.

Q. 341—If Nos. 1 and 2 met at Chicago or St. Louis which train would take siding?

A. 341—No. 1.

Q. 342—If No. 2 was ready to leave St. Louis before the scheduled time of No. 1, could No. 2 proceed and under what circumstances?

A. 342—Would proceed on No. 2 keeping clear of No. 1 as

many minutes as No. 1 was before required to clear the time for No. 2.

Q. 343—If No. 2 met No. 1 at a point between Alton and St. Louis what would be required of Conductor No. 2?

A. 343—Conductor No. 2 should stop No. 1, and inform him of his arrival.

Q. 344—If you were on No. 6 and received the following order: "Extra 300, west, Smith, has right over No. six (6), eng. 115, Morgan, New York to Buffalo," when could you leave Buffalo?

A. 344—On the arrival of extra 300 West.

Q. 345—If you were on Extra 300, what would you do?

A. 345—Would proceed from New York to Buffalo without regard to No. 8.

Q. 346—If you were on Work Extra, 275, and received the following order: "Work Extra 275, Smith, has right over all trains between Memphis and Nashville, from Seven (7) P. M., until Twelve (12) midnight," how would you be governed and at what time would you clear main track?

A. 346—Would work in the limits specified and would clear the main track at 11:55 P. M.

Q. 347—If on an opposing train and you received the same order, what time would you leave Memphis or Nashville?

A. 347—At 12:00 midnight.

Q. 348—If after receiving an order giving you the right over another train a subsequent order is received, making a positive meeting point between the two trains mentioned in the first order, which train would take the siding at meeting point?

A. 348—Train holding the right of track order will hold the main track.

Q. 349—If then a third order is received directing you to annul the meet order, what bearing, if any, has the original right of track order?

A. 349—The train holding the right of track order will still have the right of track.

Q. 350—If you were on No. 1 and received the following order: "Regular trains have right over No. one (1), eng. 67, Palmer, between Chicago and St. Paul," how would you run with respect to other regular trains?

A. 350—Would run the same as if I was an extra.

Q. 351—How much would you clear the time of opposing regular trains?

A. 351—Five minutes.

Q. 352—If you were on No. nine (9), and received an order reading as follows: "No. nine (9), eng. 200, White, will run twenty (20) minutes late, Washington to Pittsburg," what would you do?

A. 352—Would run 20 minutes late Washington to Pittsburg.

Q. 353—How are opposing trains receiving this order required to run with respect to the time specified in the order?

A. 353—They are required to clear the time specified in the order as much as they were before required to clear the regular schedule time of No. 9.

Q. 354—If you were on No. 10 and received an order reading "No. ten (10), eng. 177, Hull, will wait at Milwaukee until ten (10) A. M. for No. five (5), eng. 900, Willis," what time would you leave Milwaukee in case No. 5 failed to arrive by ten A. M.?

A. 354—At 10:00 A. M.

Q. 355—What time would No. 5 be required to clear the time of No. 10?

A. 355—At 9:55 A. M. at Milwaukee only and would clear the schedule time of No. 10 five minutes at all other stations.

Q. 356—If you were on engine 20 and received an order as follows: "Eng. 20, Smith, will display signals and run as first (1st) No. one (1), London to Paris," what would you do?

A. 356—Would display green signals and run as first No. 1 London to Paris.

Q. 357—If you were on regular No. 1 what would you do?

A. 357—Would run London to Paris as second section of No. 1.

Q. 358—Suppose you were on No. 7, and received an order reading: "No. seven (7), eng. 705, Bradley, will display signals, Louisville to Cincinnati for eng. 500, Groves," what would you do?

A. 358—Would display green signals between the points mentioned for a second section.

Q. 359—If you were on engine 500?

A. 359—Would run as second No. 7 Louisville to Cincinnati.

Q. 360—If after receiving the above order second No. 7 receives another order as follows: "Second No. seven (7), eng. 500, Groves, will display signals Louisville to Cincinnati for eng. 90, Roberts," what would you do?

A. 360—Would display green signals Louisville to Cincinnati for a third section.

Q. 361—If on engine 90 what would you do?

A. 361—Would run as third section of No. 7 Louisville to Cincinnati.

Q. 362—Would eng. 90 display signals?

A. 362—No.

Q. 363—Place candidate on each train designated in the following order and have him explain what course he would take upon receipt of same and what trains would display signals: "Engines 70, Creighton; 85, King, and 90, Roberts, will run London to Dover as first, second and third No. one (1), respectively."

A. 363—If on engine 70 would display signals London to Dover,

and run as first No. 1 between these points; if on engine 85 would display signals and run as second No. 1, London to Dover, and if on engine No. 90 would run London to Dover as third section No. 1 and not display signals.

Q. 364—If you were on second No. 1 and received the following order what would you do? "Eng. 85, King, is annulled as second No. one (1) from Chatham, following sections will change numbers accordingly."

A. 364—Could not proceed from Chatham.

Q. 365—If you were on third, fourth or any succeeding section of No. 1, what would you do?

A. 365—Would change indicators if on third No. 1 to read second No. 1 and proceed from Chatham as second No. 1, if on the 4th No. 1 would change indicators and run as third No. 1 from Chatham.

Q. 366—Suppose you receive the following order, what would you do and what right, if any, would you have over regular trains of any class: "Eng. 99, Jones, will run extra Omaha to Denver."

A. 366—Would run extra between the points mentioned clearing the time of all regular trains five minutes.

Q. 367—If you received the following order: "Eng. 99, Jones, will run extra Cincinnati to Buffalo and return to Columbus," when you get within two miles of Buffalo, which is an open telegraph office, you find that it is unnecessary to go any further, do you consider that you have a right to return to Columbus, and not go to the office at Buffalo?

A. 367—Would be obliged to go to the office at Buffalo.

Q. 368—Suppose you receive the following order, how would you be governed: "Eng. 77, Wilson, will run extra leaving Chicago on Thursday, February 17, as follows, with right over all trains: Leave Chicago eleven-thirty (11:30) P. M.; Milwaukee, twelve-twenty (12:20) A. M.; Fond du Lac, one-forty (1:40) A. M.; arrive Green Bay, three-thirty (3:30) A. M.?

A. 368—Would proceed on the schedule given without regard for any trains.

Q. 369—How much must other trains receiving this order clear this train?

A. 369—Ten minutes.

Q. 370—If you had engine 292 and received the following order how would you be governed: "Work Extra, 292, Smith, will work seven (7:00) A. M. until six (6:00) P. M., between St. Paul and Minneapolis."

A. 370—Would work between St. Paul and Minneapolis between the hours mentioned, clearing the time of all regular trains five minutes.

Q. 371—If after working on this order you received an order as follows: "Eng. 292, Smith, will run extra St. Paul to Still-

water and return to St. Paul,'' what effect would your work order have provided you got back to St. Paul before six P. M.?

A. 371—Work order is void.

Q. 372—Suppose your second order read: ''Work Extra, 292, Smith, will work ten (10:00) A. M. to six (6:00) P. M., between St. Paul and Stillwater,'' would this give you the right to use the main track between Minneapolis and Stillwater?

A. 372—No. Could only use the track between St. Paul and Stillwater.

Q. 373—In what direction must work train extras move when working on double track?

A. 373—In the direction of the traffic.

Q. 374—Should work order specify which track is to be used when working on double track?

A. 374—Yes.

Q. 375—If you were on engine 292, and received an order reading: ''Work Extra, 292, Smith, will run, Rome to Paris and work seven (7:00) A. M. until three (3:00) P. M., between Paris and Berlin,'' what would you do?

A. 375—Would run from Rome to Paris and then work between the hours of 7:00 A. M. and 3:00 P. M. between Paris and Berlin, clearing the time of all regular trains five minutes.

Q. 376—If you were on Extra 800 and received the following order: ''No. fifty-five (55), eng. 342, Jones, will wait at Paris until four (4:00) P. M., for work extra, 800, King,'' how long would you have a right to hold the main track against No. 55?

A. 376—Until 3:55 P. M. at Paris only, but clear the time of No. 55 five minutes at any other stations.

Q. 377—What time would No. 55 leave Paris?

A. 377—At 4:00 P. M.

Q. 378—If you received an order reading as follows, how would you be governed with respect to the train mentioned: ''No. fifty-five (55), of February 15 is annulled Omaha to Chicago.''

A. 378—Would proceed regardless of No. 55.

Q. 379—Suppose you receive an order reading ''Order No. twenty-five (25) is annulled,'' what effect has No. 25 thereafter?

A. 379—None whatever.

Q. 380—Can order No. 25 be brought to life again under its original number?

A. 380—No.

Q. 381—If you receive an order reading as follows: ''That part of order No. ten (10) reading 'No. five (5), eng. 200, Smith, will meet No. eight (8), eng. 170, King, at Sparta,' is annulled,'' how would you be governed?

A. 381—Would disregard that part of order No. 10 reading ''No. five (5), eng. 200, Smith, will meet No. eight (8), eng. 170, King, at Sparta.''

Q. 382—Has this order any bearing on other parts of Order No. 10?

A. 382—No.

Q. 383—Question candidate as to his knowledge and understanding of superseding orders as shown below:

"No. one (1), eng. 766, King, will meet No. two (2), eng. 642, Wilson, at Chicago instead of Omaha."

"No. five (5), eng. 300, White, has right over No. twelve (12), eng. 675, Palmer, Chicago to Milwaukee, instead of Racine."

"No. twenty-five (25), eng. 260, Clark, will display signals for eng. 95, Smith, Denver to San Francisco, instead of Oakland."

A. 383—Would proceed to Chicago and arrange to meet there as stated in the order; would treat the order the same as though the first order had read: "No. five (5), eng. 300, White, has right over No. twelve (12), eng. 675, Palmer, Chicago to Milwaukee." If No. twenty-five (25) would display signals to San Francisco.

Q. 384—What is your understanding of the following order: "Eng. 99, Jones, will run Extra St. Louis to Chicago and has right over No. two (2), eng. 135, Smith. Extra 99, North, Jones, will wait at Alton until eleven (11:00) A. M. for No. two (2), eng. 135, Smith."

A. 384—If on engine 99, I would run extra St. Louis to Chicago without regard for No. 2 and wait at Alton until 11:00 A. M. for No. 2 and then proceed. If on No. 2, I would clear engine 99 at Alton at 10:55 A. M. and understand I would have no right over engine 99 whatever except at Alton.

Q. 385—What is required in order to enter a block in a telegraph block district expecting to be met or passed by other trains at an intermediate siding in the block?

A. 385—A train order stating the trains will be met or be passed at the intermediate siding and in addition a release or caution card.

Q. 386—Can a train under any circumstances enter a block expecting to be met or be passed at an intermediate siding without a train order?

A. 386—No.

Q. 387—If a train enters a clear block with an intermediate siding expecting to clear it for an opposing train but fails, can the opposing train enter? If so, how.

A. 387—Yes; with a train order stating a train entered at a given time and in addition a caution card.

ENGINEMEN'S EXAMINATION.

Q. 1—Do you understand that in accepting employment you

assume its risks and that each employe is responsible for his own safety and must exercise care to avoid injury to others?

A. 1—Yes.

Q. 2—What is the rule in regard to use of liquor, the frequenting places where liquor is sold and the use of tobacco?

A. 2—The use of liquor and the frequenting of places where sold is prohibited, and the use of tobacco in the vicinity of passenger stations and on passenger cars is not allowed.

Q. 3—What is a train?

A. 3—A train is an engine or more than one engine coupled with or without cars displaying markers.

Q. 4—What is a regular train?

A. 4—A regular train is a train represented on the time-table.

Q. 5—What is a section of a train?

A. 5—A section is one of two or more trains running on the same schedule.

Q. 5a—What is an extra train and how is it designated?

A. 5a—An extra train is one not represented on the time-table, and is designated as extra or work extra.

Q. 6—What is a superior train?

A. 6—A superior train is one having precedence over other trains.

Q. 7—How are right, class and direction conferred?

A. 7—Right is conferred by train order; class and direction by time-table.

Q. 8—Which is superior, right, class or direction?

A. 8—Right is superior to class or direction.

Q. 9—What is a train of superior right?

A. 9—A train given precedence by train order.

Q. 10—What is a train of superior class?

A. 10—A train given precedence by time-table.

Q. 11—What is a train of superior direction?

A. 11—A train given precedence in the direction specified in the time-table, as between trains of the same class.

Q. 12—What is a time-table?

A. 12—The authority for the movement of regular trains, subject to the rules.

Q. 13—What is a schedule?

A. 13—That part of a time-table which prescribes the class, direction, number and movement of regular trains.

Q. 14—What is a pilot?

A. 14—A person assigned to a train when the engineman or conductor or both are not acquainted with the road.

Q. 15—What are his responsibilities?

A. 15—To see that the train is run in accordance with all rules and requirements.

Q. 16—How often is it necessary to compare your watch with standard clocks, and what record do you make of same?

A. 16—Before starting on each trip.

Q. 17—After obtaining standard time, what is the duty of conductors and enginemen before starting out on a run?

A. 17—Compare time with each other.

Q. 18—What is your duty when you do not have access to standard clocks?

A. 18—Obtain time from Train Dispatcher daily before commencing to work.

Q. 19—What bearing has an old time-table after a new one takes effect?

A. 19—None whatever.

Q. 20—Give me your understanding of the rights and movement of trains when there is a change in time-table?

A. 20—When time changes a train on the road will retain its orders and run upon the schedule of the train of the same number on the new time-table.

Q. 21—Suppose the time-table placed you ahead of your old time, what would you do?

A. 21—Would wait for time specified in the new time-table.

Q. 22—When can a new train that has no corresponding number on previous time-table run?

A. 22—When it is due to start from its initial point on a division after a time-table takes effect.

Q. 23—When only one time is shown on time-table for a train at any station what does it indicate?

A. 23—The leaving time.

Q. 24—When two times are shown on a time-table what does it indicate?

A. 24—The arriving and leaving time.

Q. 25—How are meeting and passing points indicated on time-tables?

A. 25—By full faced figures.

Q. 26—When both the arriving and leaving time are in full faced figures what is the meaning?

A. 26—It means that both times are meeting and passing times, or when one or more trains are to be met or passed between those times.

Q. 27—Suppose your time is in heavy type at any junction, terminal or end of double track and you are unable to find any other train of corresponding time at that point what would it mean?

A. 27—It would mean that another train is scheduled at that point within thirty minutes of my time.

Q. 28—How long are such rules and regulations printed in a time-table in effect?

A. 28—Only during the life of a time-table.

Signal Rules.

Q. 29—What is the rule relative to providing yourself with proper signals and keeping them in good order?

A. 29—We are required to provide ourselves with all necessary signals and keep them in good order ready for immediate use.

Q. 30—Where should those giving signals station themselves?

A. 30—At a point where they can be easily seen.

Q. 31—What is necessary in case signal seen by you may be intended for other trains and what would you do if in doubt?

A. 31—I would not move until I had ascertained that the signal was meant for me.

Q. 32—What kind of signals are used by day and what by night?

A. 32—Flags by day and lights by night.

Q. 33—When should night signals be displayed and what exceptions, if any?

A. 33—From sunset to sunrise, except in heavy weather, when they should be displayed to suit conditions.

Visible Signals.

Q. 34—What does a red signal signify? Green? Blue? Green and white? Green and red?

A. 34—Stop. Proceed. Car Repairer's signal Flag stop. Proceed with caution. (Or as the case may be.)

Q. 35—If you found a combination of green and red flag or green and red light placed upon the side of a track what would you do?

A. 35—Would run slowly with train under full control.

Q. 36—When a fusee is found burning on or near the track what does it indicate?

A. 36—Would wait until the fusee had burned out and then proceed with caution until satisfied that track was clear.

Q. 37—What is the hand or lamp signal to stop? Proceed? Back? Train parted? Apply air brakes? Release air brake?

A. 37—The hand or lamp swung across the track. Raised and lowered vertically. Swung in a short circle. Swung in a circle at arm's length. Swung horizontally at arm's length above the head. Held at arm's length above the head.

Q. 38—What is the meaning of any object waved violently by anyone on or near the track?

A. 38—It is a signal to stop.

Q. 39—What does one short blast of the whistle indicate? Two long? One long and three short? Four long? Five long? Three long? Two short? Three short? Four short? One long and two short? Two long and two short? One long?

A. 39—Apply brakes. Release brakes. Send out flagman. Flagman return from west to north. Flagman return from east to south. Train parted. Answer to any signal. Back. Call for signals. To call attention to signals carried. Crossing whistle. Approaching stations, mail cranes, etc.

Q. 40—What does a succession of short blasts of the whistle mean?

A. 40—An alarm whistle for person or stock on the track.

Q. 41—What does the explosion of one torpedo indicate?

A. 41—It is a signal to stop.

Q. 42—What is the meaning of the explosion of two torpedoes not more than two hundred feet apart?

A. 42—It is a signal to reduce speed and look out for danger ahead.

Air Whistle and Bell Cord Signals.

Q. 43—What signals are given for the following: When brakes stick or wheels slide? When train is running to stop at once? When train is running to stop at next station? When train is standing to apply or release air brakes? When train is running to reduce speed? When train is standing to call in flagman? When train is running to increase speed?

A. 43—One long whistle. Two. Three. Four. Four. Five Five.

Train Signals.

Q. 44—Where should headlight be displayed?

A. 44—To the front of the train.

Q. 45—When should it be concealed?

A. 45—When a train has stopped clear of a main track and switches are closed.

Q. 46—When more than one train is to take siding when will enginemen of leading engine conceal his headlight?

A. 46—When he has ascertained that the following train is into clear.

Q. 47—What does a headlight mean when seen by an approaching train?

A. 47—That the train is occupying the main track.

Q. 48—What light should yard engines display at night?

A. 48—A headlight to the front and rear.

Q. 49—When not provided with headlight at the rear, what lights must switch engines display?

A. 49—Two white lights.

Q. 50—What lights at night are to be carried by yard and light road engines on their tanks when running alone?

A. 50—Engines moving without trains after dark will display a white light upon each side of rear end of tank, and, in addition thereto, a red light in center of same. Yard engines will display the headlight to the front and rear. When yard engines are not provided with a headlight at the rear, two white lights must be displayed upon either side of the rear end of tank, and in addition a red light in center of same.

Q. 51—What signals are required on the rear of every train as markers by day and by night?

A. 51—By day a green flag at each side and by night a green light to the front and on each side, and red light to the rear on each side.

Q. 52—Will uncovered headlight relieve you from responsibility of protecting your train by flagmen?

A. 52—No.

Q. 53—What is necessary when engine heads in on cars on siding to clear main track for passing train?

A. 53—To protect by flagman.

Q. 54—What is the meaning of two green flags by day and in addition two green lights by night on front of engine?

A. 54—It means that section is following.

Q. 55—What sections of a train display these signals?

A. 55—All but the last section.

Q. 56—What is the duty of an engineer when carrying green signals?

A. 56—To call attention of other train by whistle.

Q. 57—What response should be given?

A. 57—Two blasts of the whistle.

Q. 58—If response is not given what should you do?

A. 58—We should stop and see that they understand the signals that we are displaying.

Q. 59—What is the meaning of two white flags by day and in addition two white lights by night on the front of an engine?

A. 59—Means that the train carrying them is an extra.

Q. 60—When two or more engines are coupled together which engine shall display signals?

A. 60—The leading engine.

Q. 61—What exceptions are there, if any?

A. 61—Helper engines should duplicate signals of engines they are double heading.

Q. 62—What does one flag or light displayed on the front of an engine indicate?

A. 62—The same as two.

Q. 63—What does a blue flag or a blue light indicate?

A. 63—Means that car repairers are at work on cars on that track.

Q. 64—What is your duty when a blue signal is displayed?

A. 64—That cars should not be moved without notifying workmen.

Q. 65—How about placing cars in front of a blue signal?

A. 65—It should not be done until workmen are notified.

Q. 66—What is the meaning of a signal improperly displayed or the absence of a signal where one is usually shown?

A. 66—It is a danger signal.

Q. 67—What signal is used to stop a train for passengers at a flag station?

A. 67—A combination of white and green signal.

Q. 68—Should this signal be used for any other purpose?

A. 68—No.

Q. 69—When a signal (except a fixed signal) is given to stop a train should it be acknowledged; if so, how?

A. 69—Yes. By two short blasts of the whistle.

Q. 70—Should engine bell be rung when engine is about to start?

A. 70—Yes.

Q. 71—When should engine bell be rung when running on elevated tracks?

A. 71—Only when approaching and leaving stations and in switching movements.

Q. 72—What is the rule in regard to ringing bell and sounding whistle when appraching public road crossings?

A. 72—The whistle should be sounded at whistling posts and the bell rung until the crossing has been passed.

Q. 73—Should extra trains sound whistle when approaching curves and obscure points?

A. 73—Yes.

Q. 74—When is the use of the whistle or bell prohibited?

A. 74—When running on elevated track, except at stations, and when not running in the vicinity of stations or crossing.

Q. 75—What signal is used by watchmen when necessary to stop a train?

A. 75—A red signal.

Classification and Movement of Trains.

Q. 76—How are trains classified?

A. 76—As first, second and third class.

Q. 77—Which is superior?

A. 77—Trains of the first class are superior to those of the second, trains of the second are superior to those of the third class.

Q. 78—At meeting points between extra trains which is superior?

A. 78—The train moving in the direction in which regular trains are superior is the superior train.

Q. 79—When do regular trains lose their right and class?

A. 79—When they are twelve hours behind their schedule time.

Q. 80—How can they proceed after losing their right?

A. 80—By train order only.

Q. 81—What is necessary for a conductor and engineman to know before leaving an initial station, or junction, or before passing from a double to a single track?

A. 81—That trains of the same or superior class have arrived or departed.

Q. 82—How will this information be furnished enginemen and by whom?

A. 82—The conductor will furnish the engineman with a register blank.

Q. 83—To which side will trains keep when running on double track?

A. 83—To the right (or as the case may be).

Q. 84—When more than two tracks how will you be governed?

A. 84—They will run under special regulations.

Q. 85—What would a train do that was about to leave its initial station, or a junction, when a train of the same class, in the same direction is over due?

A. 85—They will proceed on their own schedule.

Q. 86—What is necessary before a train can be started?

A. 86—A signal from the conductor.

Q. 87—How much must an inferior train clear the time of a superior train in the same direction?

A. 87—Ten minutes.

Q. 88—How would you be governed in case you were unable to clear the main track by the time specified?

A. 88—I would protect myself by flag.

Q. 89—How much will you clear the time of a superior train in the same class?

A. 89—Five minutes.

Q. 90—Which end of a siding must a train take?

A. 90—At the first switch.

Q. 91—Are there any exceptions?

A. 91—Only when authorized by train order to pull by and back in.

Q. 92—If you are on an inferior train how much would you clear the time of a train of superior class at meeting point of other than that made by train order?

A. 92—Five minutes.

Q. 93—If you are on a superior train on time, and a train of the same class fails to make its schedule meeting point with you what time would you leave?

A. 93—On time.

Q. 94—When trains meet is it necessary that they inform each other what train they are and how is it done?

A. 94—Yes, it is done by word of mouth.

Q. 95—How far apart should trains moving in the same direction keep except in districts controlled by block signal?

A. 95—Ten minutes.

Q. 96—When is a train due to arrive at a station?

A. 96—When it is due to leave the preceding station.

Q. 97—Should a train leave a station in advance of its schedule time?

A. 97—No.

Q. 98—Can a train arrive at a station in advance of its schedule time?

A. 98—Yes.

Q. 99—If on a regular train you are delayed and fall back on the time of another train of the same class how would you proceed?

A. 99—I would proceed on my own schedule.

Q. 100—If you should overtake a train of the same class so disabled that it would delay you to follow then how would you be governed and what report would you make?

A. 100—I will pass the train and report the matter to the train dispatcher at the next station.

Q. 101—If you should overtake a train of superior class which was disabled what would you do?

A. 101—I will pass the train and if necessary will assume its schedule and take their train orders.

Q. 102—What would the disabled train do?

A. 102—It would proceed on my schedule.

Q. 103—By whose authority will a train display signals for a following section, or run as extras?

A. 103—By order from the train dispatcher.

Q. 104—What class of trains are not permitted to run as following sections of a passenger train?

A. 104—Freight trains and light engines.

Q. 105—When signals for a following train are taken in at any point before following section arrives what should be done?

A. 105—I would notify the operator or agent in writing.

Q. 106—What would you do if there was no operator?

A. 106—I would leave a flagman there to notify all opposing trains.

Q. 107—What is required of you if you meet any train between the point at which signals are taken in and your next registering station?

A. 107—I would notify a train about signals I had carried.

Q. 108—What is required of a train approaching a terminal, end of double track, junctions, railroad crossings at grade, and drawbridges?

A. 108—They should approach such points prepared to stop.

Q. 109—Where required by rule or law to stop do you understand that this means a full stop?

A. 109—Yes.

Q. 110—To what speed are passenger and freight-trains limited in passing over interlocking switches?

A. 110—Passenger train 25 miles per hour; freight trains 15 miles per hour.

Q. 111—Under what circumstances are you permitted to occupy main track between yard limit boards?

A. 111—Under protection of a flagman.

Q. 112—How should extra trains approach points at which yard limit boards are erected?

A. 112—Under full control expecting the main track occupied.

Q. 113—In districts other than those controlled by a telegraph block system what is the rule in regard to passing open telegraph stations at which train order signal is not displayed?

A. 113—We should not pass it without a clearance.

Q. 114—What information is given on a clearance?

A. 114—It shows that no orders have been received for us.

Q. 115—What information is given on a release?

A. 115—It shows that the signal is displayed for some other train.

Q. 116—How are regular freight trains, extras, and work extras required to approach all stations, water tanks, coal sheds and obscure side tracks?

A. 116—With train under control.

Q. 117—How far back should train and enginemen prepare to bring their train under control?

A. 117—One mile.

Q. 118—When a train stops between stations or is delayed under circumstances by which it may be overtaken by another train, what is the duty of flagman?

A. 118—To immediately protect train.

Q. 119—What signals must flagmen take?

A. 119—Two torpedoes, a red flag by day and a red and white lantern and two fusees by night.

Q. 120—At night what is the first duty after leaving the rear of train?

A. 120—To place fusee five hundred feet from the train.

Q. 121—At what rate should he go and how far?

A. 121—As fast as he can go three quarters of a mile.

Q. 122—How far should he have an unobstructed view of an approaching train?

A. 122—One quarter of a mile.

Q. 123—When the required distance is reached, how should torpedoes be placed?

A. 123—He should place one torpedo on engineman's side.

Q. 124—How long will he remain there?

A. 124—Until recalled.

Q. 125—When flagman is recalled what precaution is necessary?

A. 125—Flagman will place another torpedo two hundred feet nearer his train than the first and return as fast as possible to his train. If train is not standing where view is unobstructed for one fourth of a mile it should be moved ahead slowly until a clear view can be had that distance.

Q. 126—What precautions are necessary relative to protecting the front end of your train in case such protection becomes necessary?

A. 126—The same as those taken at rear end of train.

Q. 127—What is the duty of an engineman when a torpedo explodes?

A. 127—He should stop the train immediately.

Q. 128—What is required when he hears two torpedoes explode?

A. 128—He will proceed cautiously, keeping sharp lookout for train ahead.

Q. 129—Who is responsible for the proper protection of train?
A. 129—The conductor.
Q. 130—Should the speed of your train be so reduced that it will check the speed of a following train before flagman can get back the required distance, what precaution should be taken?
A. 130—A red fusee should be placed upon the track.
Q. 131—What is necessary before a train can be backed on the main track?
A. 131—A flagman should be sent far enough in advance to insure protection.
Q. 132—If a train breaks in two while in motion what is the duty of all concerned?
A. 132—To give proper signals and use every precaution to prevent collision of the detached parts.
Q. 133—What signals should the engineer give and how often should they be repeated?
A. 133—He should give the train parted signal and repeat it until answered.
Q. 134—How long should the front portion of a train be kept in motion?
A. 134—Until the rear portion has stopped.
Q. 135—If you overtake the rear portion of a train broken in two are you permitted by the rules to move same?
A. 135—No.
Q. 136—Are there any exceptions to this rule?
A. 136—There are no exceptions.
Q. 137—What should be done with the forward portion of the train in all cases where practicable?
A. 137—It should be side tracked.
Q. 138—Should the engine with cars attached return for the rear portion until it is ascertained positively that the rear portion has stopped?
A. 138—No.
Q. 139—When backing up for the rear portion, what precautions are necessary?
A. 139—A flagman should be sent far enough in advance to prevent collision of the two parts.
Q. 140—Would you consider it necessary to examine the draft rigging on the rear car before backing up?
A. 140—Yes.
Q. 141—When cars are pushed by engine except when shifting and making up train in yard, what protection should be given same?
A. 141—A flagman should be stationed on the front of the leading car.
Q. 142—If employe giving signals passes from your view, what is required?
A. 142—I should stop and not proceed until signal could be seen.

Q. 143—What is required when switching over highway crossing and in front of passenger stations?

A. 143—The cars should not be detached from the engine.

Q. 144—What is necessary in switching cars that contain passengers?

A. 144—To have cars coupled to engine and air brakes in use.

Q. 145—In what form should the instructions regarding the movement of trains, condition of bridges or track be given?

A. 145—In train order form.

Q. 146—When a train backs in on siding what precaution must an enginer take regarding switches?

A. 146—He should see that the switches are set for the main track.

Q. 147—Who must know that switches are properly set before attempting to pull in or out of a siding?

A. 147—The engineman.

Q. 148—What is required when necessary to use a switch connected with a distant signal and the distant signal cannot be seen from the switch?

A. 148—The signal should be first set at danger and we must then wait until satisfied that no train is approaching between distant signal and switch.

Q. 149—At a meeting or passing point where will party employed in attending switch station himself after locking same?

A. 149—Not less than thirty feet from switch.

Q. 150—What precaution is required of a train approaching a station where passenger train is due or past due?

A. 150—They should approach under full control.

Q. 151—What about pulling into a station on a double track at which a passenger train in the opposite direction is standing or pulling into?

A. 151—They should not pull into a station until the train has started up and the rear of the train has passed the platform.

Q. 152—What about two trains approaching a station from opposite directions on doubt track at which one only is scheduled to stop?

A. 152—A train scheduled to stop should reduce speed and allow the other train to pass before stopping at the station.

Q. 153—When two trains going in opposite direction, both being scheduled to stop, which train has preference to the platform?

A. 153—The superior train.

Q. 154—In case you discover any damage to track, bridges or culverts or anything likely to cause accident to a following train what is required of you?

A. 154—Would leave a flagman to protect same; call section forces and notify train dispatcher.

Q. 155—Do you understand that every care must be taken to prevent the killing of live stock?

A. 155—Yes.

Q. 156—When live stock is killed what is required?
A. 156—A report of same on required form.
Q. 157—What is your duty in regard to the consultation of bulletin boards?
A. 157—We are required to consult them before leaving each trip.
Q. 158—Are you held accountable for all bulletins posted prior to your departure?
A. 158—Yes.
Q. 159—What is expected of you when you find fires on or near the right of way, that are likely to cause damage to property?
A. 159—To notify the train dispatcher and section forces.
Q. 160—What is your duty when you discover fences down, stock on the right of way or telegraph line down?
A. 160—To notify the first section crew and advise train dispatcher by wire.
Q. 161—Who are responsible for the safety of a train?
A. 161—Conductors and enginemen.
Q. 162—In case of doubt or uncertainty what is required?
A. 162—I would adopt the safe course and not proceed until all doubt was removed.

Rules for Train Movement by Order.

Q. 163—What about accepting orders with erasures, alterations or interlineations?
A. 163—They should not be accepted.
Q. 164—To whom should train orders be addressed?
A. 164—To those who are to execute them.
Q. 165—Who should receive a copy?
A. 165—Conductors and enginemen and those acting as pilots.
Q. 166—How are regular trains designated in a train order?
A. 166—By their train numbers, engine numbers and conductors' names.
Q. 167—How are extra trains designated?
A. 167—By engine numbers and conductors' names.
Q. 168—How must time be written in train orders?
A. 168—It must be written in words and duplicated in figures.
Q. 169—What is necessary to make a train order valid so you can use it?
A. 169—O. K. with the time and train dispatcher's initials.
Q. 170—What is required of engineman when order is delivered to him?
A. 170—To read it aloud to the conductor.
Q. 171—What is your understanding of an intermediate order?
A. 171—An order sent to an operator at actual meeting point. It should be signed by operator and delivered to first train mentioned in same arriving at his station.
Q. 172—To whom should you show all orders?

A. 172—To the head brakeman and fireman.

Q. 173—When a train is named in an order are all of its sections included and is it necessary that each particular section be specified?

A. 173—All its sections are included and it is not necessary that each particular section shall be specified.

Q. 174—Can any part of a train order specifying a particular movement be changed without altering balance of order?

A. 174—Yes.

Q. 175—When do train orders held by a regular train become void?

A. 175—When the train becomes twelve hours late.

Q. 176—What is necessary in case engineman or conductor change before completion of trip?

A. 176—They must exchange orders and conductors and enginemen must compare time.

Q. 177—What is conductor and engineman required to receive before leaving a station?

A. 177—A clearance release or train order.

Q. 178—Explain the position of the "Nun" and "Semaphore" train order signals when at stop and proceed.

A. 178—The NUN signal will show a red board or light when at danger and no board or a green light when at clear. A semaphore signal will display a horizontal arm at the right of the mast or a red light when at danger, or a diagonal or vertical arm at the right of the mast or a green or a white light when at clear.

Q. 179—What is the rule about cutting off engine from cars before rear portion of train has stopped.

A. 179—It is not allowed.

Q. 180—Under whose control is train to be run?

A. 180—The conductor's.

Q. 181—Suppose the order of the conductor conflicts with the rule?

A. 181—In that case I would not obey it.

Q. 182—What is the duty of engineman and fireman in looking back frequently in passing stations, watchmen or section men?

A. 182—They should look back frequently to see that everything is right and when passing watchmen or section men should look back for signals in case everything is not right with the train.

Q. 183—Should whistle be sounded when approaching mail crane where mail is to be exchanged and train does not stop?

A. 183—Yes.

Q. 184—How should whistle be sounded?

A. 184—The same as when approaching stations.

Q. 185—What should an engineman have on an engine in the way of danger signals when running after dark?

A. 185—A lighted red lamp in good order.

Q. 186—What persons are permitted to ride on engine?

A. 186—Division officers, foremen of bridges, signal maintainers and repairmen, road repairers, conductors and brakemen.

Q. 187—What is the rule in regard to passenger trains being moved to take coal or water or to do other work after a stop has been made at a platform?

A. 187—It is not allowed.

Q. 188—Who is responsible for engines being properly supplied with tools and appliances?

A. 188—The engineman.

Q. 189—How should turn tables be left after using?

A. 189—Locked.

Q. 190—When found unlocked to whom should report be made?

A. 190—The superintendent.

Q. 191—What is the rule in regard to detaching engines from freight trains of over twenty cars when taking coal or water?

A. 191—It should be done.

Q. 192—How should aprons and spouts be left after taking coal or water?

A. 192—In proper place so they will clear passing trains.

Q. 193—What is the rule relative to engines standing near highways, crossings, under bridges, or in the vicinity of offices, etc.?

A. 193—It should not be done.

Q. 194—To what speed are trains limited when hauling dead engines without side rods?

A. 194—Fifteen miles per hour.

Q. 195—When following a train that is carrying passengers what is necessary when approaching stations at which such train has stopped?

A. 195—We should approach with train under full control.

Q. 196—Who should make report when an accident occurs on an engine or is caused by an engine striking any person or conveyance?

A. 196—The engineman.

Telegraph Block Signals.

Q. 197—What do block signals control?

A. 197—The use of certain blocks.

Q. 198—Do they affect the movement of trains under time table or train rules?

A. 198—No.

Q. 199—Do you consider that a block signal relieves you in any way from protecting your train by flagman?

A. 199—No.

Q. 200—Explain the position of block signal when at clear and when at stop?

A. 200—When at clear they will show a diagonal or vertical arm by day and a green or white light at night; when at danger a horizontal arm or a red light at night.

Q. 201—When signal is clear to what point does it give you a clear track?

A. 201—To the outer approaching switch at the next station.

Q. 202—Does block signal control trains standing on side tracks?

A. 202—No.

Q. 203—What authority is necessary before train on side track can proceed?

A. 203—Authority from the signalman.

Q. 204—Of what does such authority consist?

A. 204—A caution card and release. A release stamped "Block is clear," a train order stamped "Block is clear," or train orders and a caution card.

Q. 205—How must trains moving under caution card expect to find main track?

A. 205—Occupied in that block.

Q. 206—When two or more trains coupled together enter a block when can they be uncoupled?

A. 206—Only at a block station and signalman should be notified.

Q. 207—What is necessary before a train can cross from one main track to another?

A. 207—A cross over permit.

Q. 208—After clearing a block what are the instructions as to re-entering or backing into the same?

A. 208—They should not back within three hundred feet of the block without authority from the signalman.

Q. 209—How long are you required to watch block signals to see that they do not change positions?

A. 209—Until the engine has passed.

Q. 210—If you came to a block station where a signalman is regularly employed and found no signalman there what would you do?

A. 210—Would wait ten minutes and proceed to the next block station and report the fact to the train dispatcher.

Q. 211—When train has parted what is the duty of engineman on approaching a block station?

A. 211—To sound the train parted signal.

Q. 212—What is your duty when you receive a "Train parted" signal from a signalman?

A. 212—Would give the train parted signal and be governed accordingly.

Q. 213—When you receive a caution card what is your duty on arrival at the next block station in advance?

A. 213—Would deliver the caution card to signalman at next block station and ascertain from him whether block in advance was clear.

Q. 214—Will hand signals be accepted as against block signals?

A. 214—No.

Q. 215—If the track is obstructed between block stations what is required?

A. 215—Would notify the nearest block signalman.

Q. 216—What is intermediate siding?

A. 216—A side track between two open block offices.

Q. 217—What is required of a train accepting a clear signal intending to proceed to the next block station on its rights, but which through delay cannot reach such station and an intermediate siding is located between blocks?

A. 217—They must take the intermediate siding or if unable to reach same they should protect themselves by flagman.

Q. 218—What form of release is required where two trains are scheduled to meet at an intermediate siding?

A. 218—A release showing that signal is displayed for those two trains to meet at intermediate siding.

Q. 219—If the inferior train fails to make the meeting point how will the superior train be governed?

A. 219—It will proceed on its time table rights.

Q. 220—When two trains meet by special order at an intermediate siding what is necessary besides the order before entering the block?

A. 220—A release stating that signal is displayed for such trains to meet at the intermediate siding.

Ten Minute Block.

Q. 221—In districts not controlled by telegraph block, how far apart must trains in the same direction keep?

A. 221—Ten minutes.

Q. 222—If you are passed by any train at an intermediate siding how long would you wait before proceeding?

A. 222—Ten minutes.

Definitions.

Q. 223—Define a block?

A. 223—A length of track of stated limits controlled by a block signal.

Q. 224—A positive block?

A. 224—One in which only one train is allowed at a time.

Q. 225—A permissive block?

A. 225—One in which two or more trains are allowed.

Q. 226—A block station?

A. 226—A place from which block signals are operated.

Q. 227—A block signal?

A. 227—A fixed signal controlling the use of a block.

Q. 228—A home block signal?

A. 228—A fixed signal at the entrance of a block to control trains entering same.

Q. 229—A distant signal?

A. 229—A fixed signal used in connection with the home signal to indicate that the home signal may be at stop when the distant

signal is at caution or that the home signal is at clear when the distant signal is clear.

Q. 230—An advance block signal?

A. 230—A fixed signal used in connection with a home block signal to subdivide the block in advance.

Q. 231—What is a block system?

A. 231—A series of consecutive blocks.

Q. 232—A telegraph block system?

A. 232—A block system in which the signals are operated manually upon information by telegraph.

Q. 233—A controlled manual system?

A. 233—A block system in which the signals are operated manually and so constructed as to require the co-operation of the signalman at both ends of the block to display a clear signal?

Q. 234—What is an automatic block system?

A. 234—A block signal in which the signals are operated by electric pneumatic or other agency actuated by a train or by a certain condition affecting the use of the block.

Signals Used in Automatic Block.

Q. 235—What signals are used in connection with the automatic block system?

A. 235—Either the semaphore or the enclosed disc.

Q. 236—How are the signal indications given by day and by night?

A. 236—By two or three positions of the semaphore arm, or by two positions of the disc by day, and at night by the use of lights of prescribed colors.

Q. 237—Explain where you would look for these signals on single, double and three tracks?

A. 237—Over or upon the right of the track to which they refer and on double track to the left of the track to which they refer (or as the case may be). For one or two tracks the signals may be attached to the same mast.

Q. 238—When these signals are located on bracket posts what signal would you read for the track upon which you were running?

A. 238—The signal on the right hand mast refers to the track farthest to the right; the next signal to the left refers to the next track to the left, and so on (or as the case may be).

Q. 239—To what side of the signal masts are semaphore arms displayed as seen from an approaching train?

A. 239—To the right (or as the case may be).

Q. 240—What would a distant block signal set at caution indicate?

A. 240—It would indicate that a train was between the distant signal and the home signal, that a switch was set wrong between the signals or the failure of the signal apparatus.

Q. 241—When the indicator disc is visible at main track switch, what would it indicate?

A. 241—It would indicate that an approaching train had reached a point within one thousand feet in advance of the block protecting the switch.

Q. 242—By what signal are the indications for the main running track given?

A. 242—By a high home signal.

Q. 243—In what direction do even number signals govern?

A. 243—South or East.

Q. 244—Odd numbered signals?

A. 244—North or West.

Q. 245—Where a semaphore is used where are the arms displayed and how many positions are there?

A. 245—To the right of the mast. There are three positions.

Q. 246—What are the night indications?

A. 246—At night the semaphore signal will show a green or white light for clear and a red light when at danger.

Q. 247—Where signal disc is used how are indications given?

A. 247—By the positions of a disc.

Q. 248—How at night?

A. 248—By lights of the same color.

Q. 249—What is the "Stop" and "Proceed" on a home semaphore by day and by night?

A. 249—When at stop it will show a horizontal arm at the right of the mast, and at night a red light. When clear it will show a diagonal or vertical arm by day and a green or white light by night.

Q. 250—Where two signals are displayed from the same mast what does the upper arm indicate?

A. 250—The upper one is the home block signal for the block in advance.

Q. 251—What does the lower arm indicate?

A. 251—It is the distant signal for the second block in advance.

Q. 252—What is a caution signal on a distant semaphore signal?

A. 252—The arm displayed in the horizontal position and at night a yellow, or green, or green and red light.

Q. 253—What is a "Clear" signal on a distant semaphore signal?

A. 253—The arm displayed diagonally or vertically and at night a green or white light.

Q. 254—What is a "Stop" signal on a home disc signal by day and by night?

A. 254—A red disc and at night a red light.

Q. 255—What is a clear signal on a home disc signal by day and by night?

A. 255—A disc withdrawn from view by day and at night a green or white light.

Q. 256—What is the "Caution" signal on the distant disc signal by day and by night?

A. 256—A distant signal will display a green disc with a white cross on its face by day, and in addition, at night a red and green, or a white, or a green light, when the home signal with which it is used is at stop, or the track is obstructed between the home and distant signals. This will indicate, proceed with caution to the home signal.

Q. 257—What does such caution signal mean?

A. 257—It means that the home signal connected with it is at stop or the track obstructed between the home and distant signal.

Q. 258—What is a "Clear" signal on a distant disc signal?

A. 258—A disc withdrawn from view, and at night a green or a white light.

Q. 259—When a train is stopped by an automatic block signal when may it proceed and how will it run?

A. 259—On double track when the signal is cleared, or after waiting one minute, train may proceed, prepared to stop short of any obstruction in the block until the next signal is reached. On single track when the signal is cleared, or after waiting five minutes, train may follow a flagman through the block.

Q. 260—What is the indication when a signal is out of service and how would you proceed?

A. 260—The arm will be removed, the number plate will be hidden, or the condition of the signal will be otherwise designated. Would proceed with caution to the next signal.

Q. 261—What is necessary when you find a signal out of order?

A. 261—I would notify the Superintendent.

Q. 262—When a home signal indicates "Stop" what does it mean?

A. 262—It indicates that the block is occupied, that a switch is wrong in the block, that a car is afoul of the main track, that a part of the track has been destroyed or impaired, or that the signal apparatus is out of order.

Q. 263—If you desire to pass from a side track to the main track and you find the red disc visible in the indicator box what would you do?

A. 263—Would not open the switch until the red disc disappeared from view.

Q. 264—Can a switch be opened to permit a train to be moved from the main to a side track when the red disc is visible in the indicator box at the switch?

A. 264—Yes.

Signals of Interlocking Plants.

Q. 265—What is a high signal?

A. 265—A signal supported on a mast 20 feet or more high.

Q. 266—A mast?

A. 266—An upright to which signals are attached.

Q. 267—A home signal?

A. 267—A fixed signal at which trains are required to stop when the route is clear.

Q. 268—A distant signal?

A. 268—A fixed signal used in connection with the home signal to indicate that the home signal may be at stop when the distant signal is at caution or that the home signal is at clear when the distant signal is at clear.

Q. 269—A dwarf signal?

A. 269—A low home signal.

Q. 270—What signal is used at interlocking plants?

A. 270—The semaphore signal.

Q. 271—How are the indications given by day and by night?

A. 271—By semaphore arm by day and lights of prescribed colors at night.

Q. 272—Where are these signals located on single, double, and three tracks?

A. 272—On single track they are either over or to the right of the track to which they refer; on double track they are located to the left of the track to which they refer (or as the case may be).

Q. 273—To what side of the mast are the arms that govern displayed as seen from an approaching train?

A. 273—To the right of the mast.

Q. 274—Explain the position of signals on bracket posts and what tracks they control?

A. 274—The signals on the right hand mast refer to the track furthest to the right; the signals on the next mast to the left refer to the next track to the left, and so on.

Q. 275—When the train service on the main track is superior to that of another how will the signals be displayed?

A. 275—The signals for the superior track will be placed six feet higher than those for the inferior track.

Q. 276—By what will the indication for main running track in the established direction be given?

A. 276—A home signal.

Q. 277—At junction points where two signals are located on the same mast what route does the top signal govern?

A. 277—The superior route.

Q. 278—What is the indication for a diverging movement from the main running track in the established direction to a secondary or side track?

A. 278—By a dwarf signal.

Q. 279—Where will the dwarf signal be located?

A. 279—To the right of the track to which it refers and either at the foot of or opposite the high home signal.

Q. 280—How will a dwarf signal show to indicate a diverging movement?

A. 280—It will show either a diagonal or vertical arm, or a green or white light.

Q. 281—How will the high home signal show?

A. 281—It will indicate stop.

Q. 282—By what signal will the indication for a reverse movement from the established direction on or from a main running track or for a movement to or from a side track in either direction be given?

A. 282—By dwarf signals.

Q. 283—What does a home signal in a horizontal position or a red light by night denote and how would you be governed?

A. 283—It indicates stop and I would not pass it while in that position.

Q. 284—What does it mean when the arm is inclined diagonally or vertically upward or downward or a green or white light is shown?

A. 284—Proceed.

Q. 285—What does it mean when the distant signal is in a horizontal position and a yellow, or green, or green and red light is shown, and how would you be governed?

A. 285—It indicates that the home signal may be at danger and train should proceed with caution.

Q. 286—What does it indicate when the distant signal is in a diagonal or vertical position, or a green or white light is shown?

A. 286—It means that the home signal is at clear.

Q. 287—When a signal indicates stop, where must engine be stopped?

A. 287—Before signal is passed.

Q. 288—If after receiving a "Clear" signal the semaphore is placed in a stop position what should be done?

A. 288—Train should stop at once.

Q. 289—What report should be made of same?

A. 289—It should be reported to the Superintendent.

Q. 290—What is your duty when approaching interlocking stations when train is parted?

A. 290—To sound the train parted signal.

Q. 291—What is your understanding about allowing sand to be dropped and overflow from ejector to run down on track in the vicinity of interlocking plants?

A. 291—It should not be done.

Q. 292—In case you experience an unusual delay at an interlocking plant what report must be made of same?

A. 292—Report should be made to the Superintendent.

Train Orders.

Q. 293—If you were on No. 1 and received the following order: "No. one (1), engine 205, Smith, will meet No. 2 (two), engine 35, Brown, at Bombay," what would you do?

A. 293—I would go to Bombay and wait indefinitely for No. 2.

Q. 294—If No. 1 and 2 are of the same class which train will take siding?

A. 294—No. 1.

Q. 295—If you were on extra 95 and received the following order: "No. five (5), engine 176, White, will meet extra 95 East, Phillips, at Hong Kong," what would you do?

A. 295—I would proceed to Hong Kong, and wait indefinitely for No. 5.

Q. 296—If you were on No. 5 what would you do?

A. 296—I would wait at Hong Kong until extra 95 arrived.

Q. 297—Has a train of superior class any right whatever to pass a point at which it has a meeting made by train order with any train until such train has arrived?

A. 297—None whatever.

Q. 298—If you were on No. 5 and received the following order: "No. five (5), engine 100, Jones, will pass No. nine (9), engine 305, Wilson, at Madrid," what would you do?

A. 298—I would proceed to Madrid and pass No. 9 at that point.

Q. 299—If on No. 9 what would you do?

A. 299—On arrival at Madrid I would arrange to let No. 5 pass with the least possible delay.

Q. 300—If you were on extra 200 and received an order reading as follows: "Extra 220 East, Thomas, will run ahead of No. ten (10), engine 130, Mills, Berlin to Paris, and pass No. six (6), engine 175, Thompson, at London," what would you do?

A. 300—I would run from Berlin to Paris ahead of No. 10 and on arrival at London would pass No. 6.

Q. 301—If on No. 10 what would you do?

A. 301—Would proceed after the departure of extra 200, looking out for them ahead.

Q. 302—If on No. 6 what would you do?

A. 302—On arrival at London I would arrange to let extra 200 pass.

Q. 303—Suppose you were on No. 1 and received an order reading as follows, what would you do: "No. one (1), engine 130, Palmer, has right over No. two (2), engine 85, Bates, St. Louis to Chicago?"

A. 303—I would proceed from St. Louis to Chicago on schedule time, keeping lookout for No. 2 at each station.

Q. 304—If No. 1 or 2 met at Chicago or St. Louis on this order which train would take siding?

A. 304—No. 1.

Q. 305—If No. 2 was ready to leave Chicago before the scheduled time of No. 1 could No. 2 proceed and under what circumstances?

A. 305—I would proceed on No. 2, keeping clear of No. 1 as many minutes as No. 1 was before required to clear the time of No. 2.

Q. 306—If No. 2 met No. 1 at a point between Alton and St. Louis what would be required of conductor of No. 2?

A. 306—He should stop No. 1 and inform him of his arrival.

Q. 307—If you were on No. 6 and received the following order: "Extra 300 West, Smith, has right over No. six (6), engine 115, Morgan, New York to Buffalo," when could you leave Buffalo?

A. 307—On the arrival of extra 300.

Q. 308—If you were on extra 300 what would you do?

A. 308—I would proceed from New York to Buffalo without regard for No. 6.

Q. 309—If you were on extra 275 and received the following order: "Work extra 275, Smith, has right over all trains between Memphis and Nashville, from seven (7:00) P. M. until twelve (12:00) midnight," how would you be governed and at what time would you clear the main track?

A. 309—I would work in the limits specified and would clear the main track at 11:55 P. M.

Q. 310—If on opposing train and you received the same orders what time would you leave Memphis or Nashville?

A. 310—At twelve midnight.

Q. 311—If after receiving an order giving you the right over another train a subsequent order is received making a positive meeting point between the two trains mentioned in the first order which train would take the siding at meeting point?

A. 311—The train first named in the right of track order.

Q. 312—If then a third order is received directing you to annul the meet order what bearing, if any, has the original right of track order?

A. 312—None whatever.

Q. 313—If you were on No. 1 and received the following order: "Regular trains have right over No. one (1), engine 67, Palmer, between Chicago and St. Paul," how would you run with respect to other regular trains?

A. 313—The same as though I was an extra.

Q. 314—How much would you clear the time of opposing regular trains?

A. 314—Five minutes.

Q. 315—If you were on No. 9 and received an order reading as follows: "No. nine (9), engine 200, White, will run twenty minutes late to Washington to Pittsburgh," what would you do?

A. 315—I would run twenty minutes late Washington to Pittsburgh.

Q. 316—How are opposing trains receiving this order required to run with respect to the time specified in this order?

A. 316—They are required to clear the time specified in the order as much as they were before required to clear the regular scheduled time of No. 9.

Q. 317—If you were on No. 10 and received an order reading: "No. ten (10), engine 177, Hull, will wait at Milwaukee until ten (10) A. M. for No. five (5), engine 900, Willis," what time would you leave Milwaukee in case No. 5 failed to arrive at 10 A. M.?

A. 317—At 10:00 A. M.

Q. 318—What time will No. 5 be required to clear the time of No. 10?

A. 318—At 9:55 A. M.

Q. 319—If you were on engine 20 and received an order as follows: "Engine 20, Smith, will display signals and run as first No. 1, London to Paris," what would you do?

A. 319—I would display green signals and run as first No. 1, London to Paris.

Q. 320—If you were on regular No. 1 what would you do?

A. 320—I would run London to Paris as second section No. 1.

Q. 321—Suppose you were on No. 7 and received an order reading: "No. seven (7), engine 705, Bradley, will display signals, Louisville to Cincinnati, for engine 500, Groves," what would you do?

A. 321—I would display green signals between the points mentioned for a second section.

Q. 322—If you were on engine 500 what would you do?

A. 322—I would run as second No. 7, Louisville to Cincinnati.

Q. 323—If after receiving the above order second No. 7 received another order as follows: "Second No. seven (7), engine 500, Groves, will display signals, Louisville to Cincinnati, for engine 90, Roberts," what would you do?

A. 323—I would display green signals, Louisville to Cincinnati, for a third section.

Q. 324—If on engine 90 what would you do?

A. 324—I would run as third section of No. 7. Louisville to Cincinnati.

Q. 325—Would engine 90 display signals?

A. 325—No.

Q. 326—Place candidate on each train designated in the following order and have him explain what course he would take upon receipt of same and what trains would display: "Engines 70, Creighton; 85, King, and 90, Roberts, will run, London to Dover, as first, second and third No. one (1), respectively."

A. 326—Upon engine 70 I would display signals, London to Dover, and run as first No. 1 between those points; if on engine 85 would display signals and run second No. 1, London to Dover, and if on engine 90 I would run, London to Dover, as third section to No. 1 and not display signals.

Q. 327—If you were on the second No. 1 and received the following order, what would you do? "Engine 85, King, is annulled as second No. one (1) from Chatham, following sections will change numbers accordingly."

A. 327—I would not proceed from Chatham.

Q. 328—If you were on the third or fourth or any succeeding sections of No. 1 what would you do?

A. 328—If on third No. 1 I would exchange indicators to read second No. 1 and proceed from Chatham as second No. 1; if on

fourth No. 1 I would exchange indicators and run as third No. 1 from Chatham.

Q. 329—Suppose you received the following order what would you do, and what right, if any, would you have over regular trains of any class? "Engine 99, Jones, will run extra, Omaha to Denver."

A. 329—I would run extra between the points mentioned, clearing the time of all regular trains five minutes.

Q. 330—If you received the following order: "Engine 99, Jones, will run extra, Cincinnati to Buffalo, and return to Columbus," when you got within two miles of Buffalo, which is an open telegraph office, you find that it is unnecessary to go any further, do you consider that you have a right to return to Columbus and not go to the office at Buffalo?

A. 330—I would be obliged to go to the office at Buffalo.

Q. 331—Suppose you received the following order, how would you be governed: "Engine 77, Wilson, will run extra, leaving Chicago on Thursday, February 17th, as follows, with right over all trains. Leave Chicago, eleven-thirty (11:30) P. M.; Milwaukee, twelve-twenty (12:20) A. M.; Fond du Lac, one-forty (1:40) A. M.; arrive Green Bay, three-thirty (3:30) A. M."

A. 331—I would proceed on the schedule as given without regard for any train.

Q. 332.—How much must other trains receiving this order clear this train?

A. 332—Ten minutes.

Q. 333—If you had engine 292 and received the following order, how would you be governed? "Work extra 292, Smith, will work seven (7:00) A. M. until six (6:00) P. M. between St. Paul and Minneapolis."

A. 333—Would work between St. Paul and Minneapolis between the hours mentioned, clearing the time of all regular trains five minutes.

Q. 334—If after working on this order you received an order as follows: "Engine 292, Smith, will run extra St. Paul to Stillwater and return to St. Paul," what effect would your work order have, provided you go back to St. Paul before six P. M.?

A. 334—None whatever.

Q. 335—Suppose your second order read: "Work extra 292, Smith, will work ten (10:00) A. M. to six (6:00) P. M. between St. Paul and Stillwater," would this give you the right to use the main track between Minneapolis and Stillwater?

A. 335—I could only use the track between St. Paul and Stillwater.

Q. 336—In what direction must work extras move when working on a double track?

A. 336—In the direction of the traffic.

Q. 337—Should work order specify which track is to be used when working on a double track?

A. 337—Yes.

Q. 338—If you were on extra 292 and received an order reading: "Work extra, 292, Smith, will run, Rome to Paris, and work 7:10 A. M. until 3 P. M. between Paris and Berlin," what would you do?

A. 338—I would run from Rome to Paris and then work between the hours of 7:00 A. M. and 3:00 P. M. between Paris and Berlin, clearing the time of all regular trains five minutes.

Q. 339—If you were on extra 800 and received the following order: "No. fifty-five (55), engine 342, Jones, will wait at Paris until 4 P. M. for work extra 800, King," how long would you have a right to hold the main track against No. 55?

A. 339—Until 3:55 P. M.

Q. 340—What time would No. 55 leave Paris?

A. 340—At 4:00 P. M.

Q. 341—If you received an order reading as follows, how would you be governed with respect to the train mentioned? "No. fifty-five (55) of February 15th is annulled, Omaha to Chicago."

A. 341—I would proceed regardless of No. 55.

Q. 342—Suppose you receive an order reading: "Order No. 25 is annulled," what effect has order No. 25 thereafter?

A. 342—None whatever.

Q. 343—Can order No. 25 be brought to life again?

A. 343—No.

Q. 344—If you receive an order reading as follows: "That part of No. ten (10) reading No. 5, engine 200, Smith, will meet No. eight (8), engine 170, King, at Sparta, is annulled," how would you be governed?

A. 344—I would disregard that part of order No. 10 reading, "No. five (5), engine 200, Smith, will meet No. eight (8), engine 170, King, at Sparta."

Q. 345—Has this order any bearing on other parts of order No. 10?

A. 345—No.

Q. 346—Question candidate as to his knowledge and understanding of superseding orders as shown below: "No. one (1), engine 766, King, will meet No. two (2), engine 642, Wilson, at Chicago instead of Omaha." "No. five (5), engine 300, White, has right over No. twelve (12), engine 675, Palmer, Chicago to Milwaukee instead of Racine." "No. twenty-five (25), engine 260, Clark, will display signals for engine 95, Smith, Denver to San Francisco instead of Oakland."

A. 346—I would proceed to Chicago and arrange to meet there as stated in the order. I would treat the order the same as though the first order read, "No. five (5), engine 300, White, has right over No. twelve (12), engine 675, Palmer, Chicago to Milwaukee." If on engine 25 I would take in my signals at San Francisco; if on engine 260 I would run as second section No. 25 to San Francisco instead of Oakland."

Q. 347—What is your understanding of the following order? "Engine 99, Jones, will run extra, St. Louis to Chicago, and has right over No. two (2), engine 136, Smith. Extra 99 North, Jones, will wait at Alton until eleven (11:00) A. M. for No. two (2), engine 135, Smith."

A. 347—If on engine 99 would run extra, St. Louis to Alton without regard for No. 2; would wait at Alton until 11:00 A. M. for No. 2 and in case they failed to arrive would proceed to Chicago without regard for No. 2. If on No. 2 I would proceed from Chicago as far as I could and clear the time of Extra 99 at 10:55 A. M.

FIREMEN'S EXAMINATION.

Q. 1—What is the rule in regard to the use of liquor, the frequenting of places where liquor is sold and the use of tobacco?

A. 1—The use of liquor and the frequenting of places where sold is prohibited. The use of tobacco is not permitted near passenger stations or on passenger cars.

Q. 2—Where should those giving signals station themselves?

A. 2—Where they can be plainly seen.

Q. 3—What is necessary in case any signal seen by you may be intended for other trains?

A. 3—It should not be taken until satisfied that it was meant for us.

Visible Signs.

Q. 4—What does a red signal signify? Green? Blue? Green and red? Green and white?

A. 4.—Stop. Proceed. Car inspector's signal. Caution signal. Flag stop.

Q. 5—What does a combination of green and red flag or light set alongside of main track indicate?

A. 5—Proceed with caution.

Q. 6—When a fusee is found burning on or near the track what does it indicate?

A. 6—It should not be passed until burned out and then train should proceed with caution.

Q. 7—What is the hand or lamp signal to stop? Proceed? Back? Train parted? Apply air brakes? Release air brakes?

A. 7—Swung across track. Raised and lowered vertically. Swung in a short circle. Swung in a circle at arm's length. Swung horizontally at arm's length above the head. Held at arm's length above the head.

Q. 8—What is the meaning of any object waved violently by any one on or near the track?

A. 8—It is a signal to stop.

Audible Signals.

Q. 9—What does one short blast of steam whistle indicate?

Two long? One long and three short? Four long? Five long? Three long and two short? Four short? One long and two short? Two long and two short? One long? Three short?

A. 9—Apply brakes. Release brakes. Send out flagman. Flagman return from West or North. Flagman return from East or South. Train parted. Answer to any signal except train parted. Call for signal. To call attention to signals carried. Highway crossing, etc. Station, railway crossing, obscure curve, etc. Back.

Q. 10—What does a succession of short blasts of the whistle mean?

A. 10—It is an alarm whistle to persons or stock on track.

Q. 11—What does the explosion of one torpedo indicate?

A. 11—It means stop.

Q. 12—What is the meaning of the explosion of two torpedoes not more than 200 feet apart?

A. 12—It means to proceed cautiously, expecting to find track blocked.

Q. 13—What are the air whistle signals for the following? When brakes stick or wheels slide? When train is running to stop at once? When train is running to stop at next station? When train is standing apply or release air brakes? When train is running to reduce speed? When train is standing to call in flag man? When train is running to increase speed?

A. 13—One whistle. Two. Three. Four. Four. Five. Five.

Train Signals.

Q. 14—What is the meaning of a headlight when seen by an approaching train?

A. 14—That a train is occupying the main track.

Q. 15—What lights do yard engines display?

A. 15—A headlight to the front and rear.

Q. 16—What do green signals displayed on the front of an engine indicate?

A. 16—That a section is following.

Q. 17—What do white signals displayed on the front of an engine indicate?

A. 17—That the train carrying them is an extra.

Q. 18—What does a blue flag or a blue light indicate?

A. 18—That car repairers are at work on cars on that track.

Q. 19—What is your duty when blue signal is displayed?

A. 19—To call engineman's attention to same.

Q. 20—What is the meaning of a signal improperly displayed or the absence of a signal where one is usually shown?

A. 20—It is a danger signal.

Q. 21—What signal is used to stop a train for passengers at a flag station?

A. 21—A combination of green and white flag.

Q. 22—Do you understand that engine bell must be rung when about to start?

A. 22—Yes.

Q. 23—When should engine bell be rung when running on elevated tracks?

A. 23—Only when approaching and leaving stations and in switching movements.

Q. 24—What is the rule in regard to ringing bell when approaching public road crossings?

A. 24—It should be rung from the whistling post until crossing is past.

Q. 25—When is the use of whistle and bell prohibited?

A. 25—When running on elevated tracks, except at stations, and when not running in the vicinity of stations and crossings.

Q. 26—What is required of you in regard to looking back frequently to see that all is right, also in passing stations, watchmen or section men?

A. 26—It must be done.

Q. 27—What is the duty of a fireman when approaching fixed signals?

A. 27—To note their position and report to engineman.

Q. 28—Do you understand that you must note and report to the engineer all signals observed and inform him of the position of fixed signals and determine their indication?

A. 28—Yes.

Q. 29—What is necessary before a train can start from a station?

A. 29—A signal from the conductor.

Q. 30—In case emergency requires that you go out to flag a train what signals would you take?

A. 30—Two torpedoes, a red flag by day, and a red and white lantern and two fusees by night.

Q. 31—At night what is your first duty after leaving train?

A. 31—To place a fusee five hundred feet from the train.

Q. 32—At what rate should you go and how far?

A. 32—As fast as I can go. Three-fourths mile.

Q. 33—How far should you have an unobstructed view of approaching trains?

A. 33—One-fourth mile.

Q. 34—When you are recalled what precautions would you take?

A. 34—I would place another torpedo 200 feet nearer the train than the first one and return as fast as possible to the train.

Q. 35—If train breaks in two while in motion what is the duty of all concerned?

A. 35—Do everything possible to prevent collision of the two parts.

Q. 36—When pushing cars what would you do on the disap-

pearance from view of the trainmen or lamp by which signals are being given?

A. 36—I would tell engineman to stop and would not start again until man giving signals was in view.

Q. 37—Do you consider it your duty to see that enginemen allow you to read all train orders that they receive?

A. 37—Yes.

Q. 38—Describe the position of "Nun" and "Semaphore" signals when to stop and to proceed?

A. 38—The NUN signal will show a red board or light when at danger, and no board or a green light when clear. A semaphore signal will display a horizontal arm at the right of the mast, or red light when at danger, or a diagonal or vertical arm at the right of the mast, or a green or white light when clear.

Q. 39—How long before leaving time should you be on hand?

A. 39—At the time required by the master mechanic.

Q. 40—What persons are allowed to ride on an engine?

A. 40—Division officers, foremen of bridges, signal maintainers and repairmen, road repairers, conductors and brakemen.

Q. 41—What is the rule in regard to riding on locomotive pilots?

A. 41—It is not allowed.

Q. 42—How should turn-tables be left after being used?

A. 42—They should be locked.

Q. 43—What is the rule in regard to detaching engines from freight trains of over twenty cars when taking coal or water?

A. 43—It should be done.

Q. 44—How should aprons and spouts be left after taking coal and water?

A. 44—They should be left in proper position, so they clear passing trains.

Q. 45—What is the rule in regard to reading while on duty?

A. 45—It is not allowed.

Q. 46—Should you witness an accident on the Company's property or should any one inform you of such, what is your duty?

A. 46—To make report of same.

Q. 47—When are night signals displayed?

A. 47—From sunset to sunrise, except in heavy weather, when they should be displayed to suit requirements.

Q. 48—At what points are you allowed to clean ash pan and front end?

A. 48—Only at designated points.

Q. 49—What is the rule in regard to passenger trains being moved to take coal or water or to do other work after a stop has been made at platform?

A. 49—It must be done.

SIGNALMEN—INTERLOCKING PLANT EXAMINATION.

Q. 1—Have you received a copy of the Rules and Regulations

of the Railway Company, effective ————————, 19—, and do you understand that they supersede all previous rules and regulations?

A. 1—Yes.

Q. 2—Have you read the Rules and Regulations; are you conversant with them and will you obey the instructions contained therein?

A. 2—Yes.

Q. 3—Do you understand that in accepting employment you assume its risks, and that each employe is responsible for his own safety, and must exercise care to avoid injury to others?

A. 3—Yes.

Q. 4—What is the rule in regard to the use of liquor, the frequenting of places where liquor is sold and the use of tobacco?

A. 4—The use of liquor and the frequenting of places where sold is prohibited and the use of tobacco in and about passenger stations and on passenger cars is not allowed.

Q. 5—When are night signals displayed?

A. 5—From sunset to sunrise, except in heavy weather, when they should be displayed to suit conditions.

Definitions.

Q. 6—What is a high signal?

A. 6—A signal supported on a mast at least twenty feet above the track.

Q. 7—A mast?

A. 7—An upright to which the signals are attached.

Q. 8—A home signal?

A. 8—A fixed signal at a point at which trains are required to stop when the route is not clear.

Q. 9—A distant signal?

A. 9—A fixed signal used in connection with the home signal to indicate that the home signal may be at stop when the distant signal is at caution; or that the home signal is at clear when the distant signal is clear.

Q. 10—A dwarf signal?

A. 10—A signal indicating a diverging movement from the main track.

Q. 11—What is the normal position of home and distant signals?

A. 11—The normal indication of home signal is at stop and of distant signal at caution.

Q. 12—On what side of mast are arms displayed for trains in a particular direction?

A. 12—To the right of the mast.

Q. 13—When the train service on one main running track is superior to that of another how are the signals arranged for each track?

A. 13—The signals for the superior track are located 6½ feet higher than those for inferior tracks.

Q. 14—How is the signal for a main running track movement given?

A. 14—By a high home signal.

Q. 15—At junction points where two signals are located on the same mast what route does the top signal govern?

A. 15—A superior route.

Q. 16—What is the indication for a diverging movement from the main running track in the established direction to secondary or side track?

A. 16—A diagonal or vertical arm or a green or white light.

Q. 17—Where will the dwarf signal be located?

A. 17—On the right of and adjoining the track to which it refers and either at the foot of or opposite the high home signal.

Q. 18—How will the light on the dwarf signal show to indicate a diverging movement?

A. 18—Green or white.

Q. 19—How will the high home signal show when the dwarf signal indicates diverging movement?

A. 19—Stop.

Q. 20—By what signal will the indication for a reverse movement from the established direction, on or from the main running track, or for a movement to or from a side track, in either direction be given?

A. 20—By a dwarf signal.

Q. 21—When the route is not clear how does the home signal show by day and by night?

A. 21—A horizontal arm by day and in addition a red light by night.

Q. 22—How does it show when clear by day and by night?

A. 22—The arm displayed diagonally or vertically, and at night a green or white light.

Q. 23—How does the distant signal show when at caution by day and by night?

A. 23—The arm displayed in the horizontal position and at night a yellow, or a green, or a green and red light.

Q. 24—How does the distant signal show when the route is clear by day and by night?

A. 24—The arm displayed diagonally or vertically and at night a green or a white light.

Q. 25—What persons are allowed to operate levers and other appliances at interlocking towers?

A. 25—Only those whose duties require them to operate them.

Q. 26—Except when signals are cleared for the passage of trains how should they be left?

A. 26—In the normal position.

Q. 27—When should signals be cleared for approaching trains?

A. 27—In sufficient time to avoid delay to the train.

Q. 28—After a train has passed when should signals be restored to normal position?

A. 28—As soon as the train has passed to home signal limits.

Q. 29—If, after having given a train clear track it is necessary to change the route, what must be done before switches are changed?

A. 29—The train must be stopped.

Q. 30—What about moving a switch when a train is standing close to same?

A. 30—It should not be done.

Q. 31—If any indication of derangement of the signal apparatus, what must be done before operating same?

A. 31—They should be examined.

Q. 32—What is necessary in cold weather to prevent connections from freezing?

A. 32—Signal should be operated frequently to prevent freezing.

Q. 33—What is necessary when a signal fails to work properly?

A. 33—It should not be used and should be secured to give the normal indication until repaired.

Q. 34—What about allowing alterations or additions to interlocking plants?

A. 34—It should not be done without proper authority.

Q. 35—If there is a derailment or switch run through at an interlocking plant, or if any damage occurs to same, what is required?

A. 35—The signal should be placed to give the normal indication and no train allowed to use the same until they have been put in order.

Q. 36—What is necessary when a switch is disconnected from interlocking apparatus?

A. 36—It must be securely fastened,

Q. 37—What is necessary during snow storms?

A. 37—To know that switches are properly cleaned.

Q. 38—If any electrical or mechanical appliance fails to work properly what is required of signalman?

A. 38—Notice should be sent to the Division Superintendent and the repairman.

Q. 39—When switches or signals are being repaired what is required of signalman?

A. 39—He should have an understanding with repairman before operating such signals.

Q. 40—What is your duty in regard to observing passing trains and what would you do in case you found anything wrong with same?

A. 40—I would do everything possible to prevent damage or injury.

Q. 41—If you have information that an approaching train has broken in two what is your duty?

A. 41—I would use every effort to give the train a clear route and give train parted signals to enginemen.

Q. 42—What danger signal should be kept on hand at interlocking towers?
A. 42—Red lamps and flags, torpedoes and fusees.
Q. 43—If necessary to discontinue the use of any signal how will signalman handle trains?
A. 43—By hand signal.
Q. 44—Who is held responsible for the care of an interlocking station and its appliances?
A. 44—The signalman.
Q. 45—How should lights in an interlocking station be placed?
A. 45—So they cannot be seen from the approaching train.
Q. 46—What should be done when a train runs by a stop signal?
A. 46—The Division Superintendent should be notified.
Q. 47—What persons are allowed in an interlocking station?
A. 47—Only those whose duties require them to be there.

Repairmen.

Q. 48—Who is responsible for the proper inspection and adjustment of interlocking plants?
A. 48—The repairman.
Q. 49—What report must be made when track or switches do not permit of proper operation?
A. 49—A report should be sent to the Superintendent.
Q. 50—When repairing interlocking plants with whom must you have an understanding and whom must you notify when such repairs are completed?
A. 50—The signalman.
Q. 51—What is necessary when any switch is disconnected?
A. 51—It should be securely fastened before any train is permitted to pass over it.
Q. 52—By whom are alterations or additions to interlocking plants authorized?
A. 52—The Chief Engineer.
Q. 53—To whom must you report your whereabouts?
A. 53—The Division Superintendent.

TRAIN DISPATCHERS' EXAMINATION.

Q. 1—What is a train?
A. 1—A train is an engine or more than one engine, coupled with or without cars, displaying markers.
Q. 2—A regular train?
A. 2—A regular train is a train represented on the time-table.
Q. 3—What is a section of a train?
A. 3—A section is one of two or more trains running on the same schedule.
Q. 4—An extra train?
A. 4—An extra train is one not represented on the time-table.

Q. 5—What is a work extra?
A. 5—A work extra is a train working in specified limits.
Q. 6—A superior train?
A. 6—A superior train is one having precedence over other trains.
Q. 7—How are right, class and direction conferred?
A. 7—Right is conferred by train order; class and direction by time-table.
Q. 8—Which is superior, right, class or direction?
A. 8—Right is superior to class or direction.
Q. 9—What is a train of superior right?
A. 9—A train given precedence by train order.
Q. 10—A train of superior class?
A. 10—A train given precedence by time-table.
Q. 11—A train of superior direction?
A. 11—A train given precedence in the direction specified in the time-table as between trains of the same class.
Q. 12—What is a time-table?
A. 12—The authority for the movement of a regular train, subject to the rules.
Q. 13—What is a schedule?
A. 13—That part of a time-table which prescribes the class, direction, number and movement of a regular train.
Q. 14—What is a pilot?
A. 14—A person assigned to a train when the engineman or conductor or both are not acquainted with the road.
Q. 15—What are his responsibilities?
A. 15—To see that the train is run in accordance with all rules and requirements.
Q. 16—What bearing has an old time-table after a new one takes effect?
A. 16—None whatever.
Q. 17—Give me your understanding of the rights and movements of trains when there is a change of time-table?
A. 17—When time changes a train on the road will retain its orders and run upon the schedule of the train of same number on the new time-table.
Q. 18—If time-table places such train ahead of its old time, what would be done?
A. 18—It would assume the time of the new schedule and run late if necessary.
Q. 19—When can a train that has no corresponding number on previous time-table run?
A. 19—When it is due to start from its initial point after the time-table takes effect.
Q. 20—Whose duty is it to know that conductors and enginemen are provided with copy of current time-table before starting on a run?
A. 20—The Train Dispatcher's.

Q. 21—When only one time is shown on a time-table for a train at any point what does it indicate?

A. 21—The leaving time.

Q. 22—When there are two times shown on time-tables what does it indicate?

A. 22—The arriving and leaving time.

Q. 23—How are meeting and passing points designated on time-table?

A. 23—By full faced figures.

Q. 24—When both arriving and leaving time are in full faced figures what is the meaning?

A. 24—It means that both times are meeting or passing times, or when one or more trains are to be met or passed between those times.

Q. 25—How is the time of trains shown at the ends of double track, junctions and terminals where the difference in time of trains is thirty minutes or less?

A. 25—In heavy type.

Q. 26—What do two green signals displayed on the front of an engine indicate?

A. 26—That a section is following.

Q. 27—What signals should extra trains display?

A. 27—White signals.

Q. 28—What is your duty when you are advised that a signal is improperly displayed or is not shown at a point where it should be shown?

A. 28—To ascertain the cause and advise trains as to how they will be governed.

Q. 29—How are trains classified?

A. 29—As first, second and third class.

Q. 30—Which is superior?

A. 30—Trains of the first class are superior to those of the second; trains of the second are superior to those of the third class.

Q. 31—At meeting points between extra trains which is superior?

A. 31—The train moving in the direction in which regular trains are superior is the superior train.

Q. 32—When do regular trains lose their right and class?

A. 32—When they are twelve hours behind their schedule time.

Q. 33—How can they proceed after losing their right and class?

A. 33—By train order only.

Q. 34—What is necessary for a conductor and engineman to know before leaving an initial station or junction or before passing from a double to a single track?

A. 34—That trains of the same or superior class have arrived or departed.

Q. 35—On which side will trains keep when running on a double track?

A. 35—To the right (or as the case may be).

Q. 36—When more than two tracks how will they run?

A. 36—They will run under special regulations.

Q. 37—What would a train do which is about to leave its initial station or junction when a train of the same class in the same direction is overdue?

A. 37—It will proceed on its own schedule.

Q. 38—How much must an inferior train clear the time of a superior train in the same direction?

A. 38—Ten minutes.

Q. 39—How much should an inferior train clear the time of a superior train of the same class?

A. 39—Five minutes.

Q. 40—Under what circumstances can a train run by and back in at a meeting point?

A. 40—Only when authorized by train order to pull by and back in.

Q. 41—How much should an inferior train clear the time of a train of superior class at meeting point other than made by train order?

A. 41—Five minutes.

Q. 42—When will a superior train leave a scheduled meeting point when a train of the same class fails to make such meeting point?

A. 42—On time.

Q. 43—How far apart should trains moving in the same direction keep in districts not controlled by block signals?

A. 43—Ten minutes.

Q. 44—When is a train due to arrive at a station?

A. 44—When it is due to leave the preceding station.

Q. 45—Can a train leave its station in advance of its schedule time?

A. 45—No.

Q. 46—Can a train arrive at a station in advance of its schedule time?

A. 46—Yes.

Q. 47—If a train is delayed and falls back on the time of another train of the same class how can they proceed?

A. 47—On their own schedule.

Q. 48—What is necessary before a train can display signals for a following train or run as an extra?

A. 48—Train orders from Train Dispatcher.

Q. 49—What class of trains are not permitted to run as following section to a passenger train?

A. 49—Freight trains and light engines.

Q. 50—What is your duty when signal for a following train is taken in at any point in the way of protecting the following

train until it arrives at the point at which signal has been taken in?

A. 50—I would see that the operator at point where signals were taken in displayed a signal against opposing trains until the second section arrived, or in the event of there being no operator I would notify opposing trains before reaching such point.

Q. 51—What information is given on a clearance?

A. 51—It shows that no orders have been received for the train to which it is given.

Q. 52—What information is given on a release?

A. 52—It shows that the signal is displayed for a train other than the one to which a release is given or a block.

Q. 53—When a train breaks in two, do you consider that you have any authority to direct a train to move or pass the detached portion?

A. 53—No.

Q. 54—In what form should instructions respecting the movements of trains or the condition of track and bridges be issued?

A. 54—In train order form.

Q. 55—What is your duty when you are advised of any defect in track, bridges, culverts, etc.?

A. 55—To notify all trains of same and see that necessary force is called out to make repairs.

Q. 56—What is your duty when advised of fires on or near the right of way, when stock is on the right of way, or fences or telegraph lines are reported down?

A. 56—To advise trains of same and see that the necessary forces are called out to make repairs.

Q. 57—In case of doubt or uncertainty what is required?

A. 57—I would adopt the safe course and not run any risks.

Q. 58—What information should train orders contain?

A. 58—Only such information or instructions as are necessary to convey.

Q. 59—What precautions are necessary to make train orders clear so that all concerned will interpret them the same?

A. 59—They should be brief and clear so that all concerned will understand them the same.

Q. 60—Should train orders be given in the same words to all persons or trains addressed?

A. 60—Yes.

Q. 61—How should train orders be numbered?

A. 61—They should be numbered consecutively, beginning at midnight.

Q. 62—To whom should train orders be addressed?

A. 62—To those who are to execute them.

Q. 63—What record should train dispatchers keep of train orders?

A. 63—They should be written in full in the book provided

for that purpose, with the names of those signing same; time orders were "X'd" and "O. K.'d" etc.

Q. 64—When should such record be made?

A. 64—It should be made at once.

Q. 65—How are regular trains designated in train order?

A. 65—By their train numbers, engine numbers, and conductor's names.

Q. 66—How are extra trains designated?

A. 66—By engine numbers and conductor's names.

Q. 67—How should time be shown in the body of order?

A. 67—It must be written in words and duplicated in figures.

Q. 68—What does the signal "31" mean?

A. 68—To clear the line for train orders.

Q. 69—When a train order is to be sent to two or more offices should it be transmitted simultaneously to all offices?

A. 69—Yes.

Q. 70—In what order will a different order be addressed to the different trains?

A. 70—In the order of superiority of trains.

Q. 71— When not sent to all trains at once in one transmission to whom must order be sent first?

A. 71—To the superior train.

Q. 72—When a meeting point is to be made between two trains at a certain station where should such order be sent?

A. 72—To a point either side of the actual meeting point.

Q. 73—When an operator is located at the actual meeting point what is desired?

A. 73—The orders should be sent to the operator at the actual meeting point.

Q. 74—When issuing an order to a train at an actual meeting point, what information should be given in same?

A. 74—The order should show that the train receives the order at that point.

Q. 75—When an order is sent to an intermediate station who should sign it, and to whom will operator deliver same?

A. 75—The operator should sign it and deliver same to first train mentioned in same arriving at his station.

Q. 76—What kind of orders are sent to the intermediate station?

A. 76—Time and positive meet orders.

Q. 77—When can "O. K." be given to a train order for an inferior train?

A. 77—When "X" response has been received from the superior train.

Q. 78—What is necessary before an order can be used?

A. 78—O. K., with the time and Train Dispatcher's initials.

Q. 79—If the line fails before an office has sent "X" response to an order what effect has the order at that point?

A. 79—None whatever.

Q. 80—What are the requirements when train dispatcher delivers orders to a train and what record should be made of same?

A. 80—The same as at any other point and an impression should be made in Train Order Book from the original copy.

Q. 81—How should an order be addressed that is to be delivered by one train to another at a point not a telegraph station?

A. 81—It must be addressed to C. & E. ———— at ———— care of ————.

Q. 82—When will O. K. be given to such an order?

A. 82—When the conductor carrying such order signs it.

Q. 83—What is required of conductor making such delivery?

A. 83—He must procure the signature of the conductor and engineman of the train to which he delivers order on a copy of same which he will retain.

Q. 84—What is required of conductor making such delivery upon his arrival at next open telegraph office?

A. 84—He must deliver the order to the operator, who will transmit signatures of conductor and engineman to the train dispatcher.

Q. 85—Is it permissible for a train dispatcher to O. K. an order for an inferior train when the same order has been forwarded to the superior train at a non-telegraph office before he receives the signature of the conductor and engineman of the superior train?

A. 85—No.

Q. 86—When a train is named in a train order are all of its sections included and who should have copies of same?

A. 86—All its sections are included and all sections should have copies, unless particular sections are specified.

Q. 87—How long are train orders in effect?

A. 87—Until fulfilled, superseded or annulled.

Q. 88—Can any part of a train order specifying a particular movement be superseded or annulled?

A. 88—Yes.

Q. 89—When a regular train becomes 12 hours late what effect has any order which it may hold?

A. 89—None whatever.

Q. 90—Describe the position of the Nun and Semaphore train order signals when at "Stop" and "Proceed."

A. 90—The NUN signal will show a red board or light when at danger, and no board or a green light when clear. A semaphore signal will display a horizontal arm at the right of the mast, or a red light when at danger, or a diagonal or vertical arm at the right of the mast, or a green or white light when clear.

Q. 91—What does the signal "X" signify?

A. 91—It means that the operator has displayed his signal, acknowledges receipt of order and pledges himself to hold the train and when O. K. is given to deliver it.

Q. 92—In case of severe storms, or high water, what notice should be given trains and in what form?

A. 92—I would notify trains of any existing or threatened danger by train order.

Q. 93—What about calling out section men, roadmasters, bridge foremen, etc.?

A. 93—I would see that it was done.

Q. 94—In case of threatened storms, or high water, should train dispatchers keep in touch with the situation and take frequent weather reports?

A. 94—Yes.

Q. 95—What about trains exceeding schedule time during extreme cold weather?

A. 95—It should not be done.

Q. 96—In case you are advised of an injury to any passenger or employe what is required?

A. 96—To see that everything is done to care for him and that the nearest company's physician is called.

Q. 97—What is necessary when company surgeon cannot be had?

A. 97—The nearest competent surgeon should be called.

Q. 98—When a number of persons are injured on or by a train, necessitating the services of several physicians, what is your duty?

A. 98—To see that everything is done to hurry surgeon to the point where needed.

Q. 99—When persons trespassing on the company's property are injured, what should be done with them and what expense should be incurred by the company?

A. 99—They should be sent to their homes or placed in charge of authorities, and no expense should be incurred by the company.

Q. 100—If you are advised of the injury of any person on the company's property what is required of you?

A. 100—To make report of same.

Q. 101—When an accident results in death, what would you direct the person in charge of remains to do with same?

A. 101—To take the remains to the nearest station in county or state in which accident occurred.

Block Signals.

Q. 102—What do block signals control?

A. 102—The use of certain blocks.

Q. 103—By whose authority are caution cards issued and in what form?

A. 103—By authority of the train dispatcher. A train order should be sent directing them to issue same.

Q. 104—Are train dispatchers authorized to issue caution cards

to any train to enter a block occupied by a passenger train, and what exceptions, if any?

A. 104—Only in case of accident.

Q. 105—What must a train expect that is running on a caution card?

A. 105—To find the track occupied in that block.

Q. 106—When you are advised that a block station has been closed what is your duty?

A. 106—To notify all concerned.

Q. 107—What is an intermediate siding in a block signal district?

A. 107—A side track between two open block offices.

Q. 108—If an inferior train accepts to a clear block intending to proceed to the next block station on its rights, but through delay it is obliged to take an intermediate siding, how can a superior train enter such block?

A. 108—On a caution card.

Definitions.

Q. 109—What is a block?

A. 109—A length of track of stated limits controlled by block signal.

Q. 110—A positive block?

A. 110—One in which only one train is allowed at a time.

Q. 111—A permissive block?

A. 111—One in which two or more trains are allowed.

Q. 112—A block station?

A. 112—A place from which block signals are operated.

Q. 113—A block signal?

A. 113—A fixed signal controlling the use of a block.

Q. 114—A home block signal?

A. 114—A fixed signal at the entrance of a block to control trains entering same.

Q. 115—A distant signal?

A. 115—A fixed signal used in connection with the home signal to indicate that the home signal may be at stop when the distant signal is at caution, or that the home signal is clear when the distant signal is clear.

Q. 116—An advance block signal?

A. 116—A fixed signal used in connection with a home block signal to subdivide the block in advance.

Q. 117—A block system?

A. 117—A series of consecutive blocks.

Q. 118—A telegraph block system?

A. 118—A block system in which the block signals are operated manually upon information by telegraph.

Q. 119—A controlled manual block system?

A. 119—A block system in which the signals are operated

manually and so constructed as to require the co-operation of the signalman at both ends of the block to display a clear signal.

Q. 120—An automatic block system?

A. 120—A block system in which the signals are operated by electric, pneumatic or other agency, actuated by a train or certain conditions affecting the use of the block.

Train Orders.

Q. 121—How would you issue an order directing No. 1 and 2 to meet at Bombay?

A. 121—No. one, 1, eng. 205, Smith, will meet No. two, 2, eng. 35, Brown, at Bombay.

Q. 122—How would you issue an order directing No. 1 to meet No. 2 at Bombay, second No. 4 at Paris and extra 95 at London?

A. 122—No. one 1, eng. 205, Smith, will meet No. two 2, eng. 35, Brown, at Bombay; second No. four 4, eng. 65, Wilson, at Paris, and Extra 95 East, Phillips, at London.

Q. 123—What is necessary in case you desire that the superior train takes side track?

A. 123—To state in the order that the superior train would take the side track.

Q. 124—If you desire to have No. 1 let No. 7 by at Chicago, what form of an order would you issue?

A. 124—No. seven 7, eng. 63, Palmer, will pass No. one 1, eng. 105, White, at Chicago.

Q. 125—If you wanted to run extra 594 ahead of No. 6, Berlin to Paris, how would you issue the order?

A. 125—Extra 594, east, Potter, will run ahead of No. six 6, eng. 100, King, Berlin to Paris.

Q. 126—If you desired that No. 1 should pass No. 3 at St. Louis and run ahead of No. 7 from Alton to Chicago, what order would you issue?

A. 126—No. one 1, eng. 300, Thomas, will pass No. three 3, eng. 405, Mills, at St. Louis and run ahead of No. seven 7, eng. 350, Morgan, Alton to Chicago.

Q. 127—If you desired to give No. 1 right over No. 6, Chicago to St. Paul, what form of order would you issue?

A. 127—No. one 1, eng. 64, Wright, has right over No. six 6, eng. 85, Bates, Chicago to St. Paul.

Q. 128—In case Nos. 1 and 6 meet at Sharon or St. Paul which would take the side track?

A. 128—No. one 1 at St. Paul. No. six 6 at Sharon.

Q. 129—In case No. 6 is ready to leave St. Paul before the schedule time of No. 1 can they proceed, and under what circumstances?

A. 129—Yes, they can proceed by clearing the time of No. 1 as much as No. 1 was before required to clear the time of No. 6.

Q. 130—How much would No. 6 have to clear the time of No. 1?

A. 130—Five minutes.

Q. 131—Suppose it is necessary that you give Extra 37 North right over No. 16, Kansas City to Omaha, what form of an order would you give?

A. 131—Extra 37, North, Clark, has right over No. sixteen 16, eng. 550, King, Kansas City to Omaha.

Q. 132—What time could No. 16 leave Omaha on this order?

A. 132—On arrival of Extra 37 North.

Q. 133—What form of order would you issue to give work extra 275 right over all trains between Paris and Rome?

A. 133—Work extra 275, Thompson, has right over all trains between Rome and Paris from eleven 11:00 a. m. to six 6 p. m.

Q. 134—What time would extra 275 be required to clear main track?

A. 134—At 5:55 p. m.

Q. 135—At what time would opposing trains be permitted to leave Rome or Paris?

A. 135—At 6:00 p. m.

Q. 135½—What form of order would you use to give regular trains right over a given train?

A. 135½—Regular trains have right over No. one 1, eng. 67, Palmer, between New Orleans and St. Louis.

Q. 136—How would the train mentioned in the order proceed and how much would it clear the time of the regular trains?

A. 136—It would clear the time of all regular trains as if it were an extra.

Q. 137—How would you issue an order directing a train to run late between designated points?

A. 137—No. five 5, eng. 455, Wilson, will run twenty 20 minutes late, Chicago to Madison.

Q. 138—How would other trains run with respect to this time?

A. 138—They would clear the time specified in the order as much as they were before required to clear the regular schedule time of No. 5.

Q. 139—How would you issue an order giving one train up to a certain time to reach a designated point against a superior train?

A. 139—No. ten 10, eng. 665, Morgan, will wait at Omaha until three 3:00 p. m. for No. three 3, eng. 600, Willis.

Q. 140—What time would the second named train be required to clear the time of the first named train at such point?

A. 140—They would clear the time mentioned in the order as much as they were before required to clear the regular schedule time of No. 10.

Q. 141—What time would the first named train leave such point if the second named train failed to arrive?

A. 141—At 3:00 p. m.

Q. 142—What form of order would you issue when necessary to run a train as first section to a regular train?

A. 142—Eng. 296, Smith, will display signals and run as first No. one 1, New York to Boston.

Q. 143—If you desired to have a regular train display signals for a second section what order would you give?

A. 143—No. five 5, eng. 672, Brown, will display signals New York to Boston for eng. 302, King.

Q. 144—If you then desired to have the second section display signals for a third section what would you do?

A. 144—Second No. three 3, eng. 260, Wilson, will display signals Washington to New York for eng. 90, Roberts.

Q. 145—If you desired to run a train in three or more sections what form of order would you use?

A. 145—Eng. 200, Brown, 305, King, and 546, Knox will run Nashville to Louisville as first, second and third No. one 1 respectively.

Q. 146—If you desired to annul a second section of a train what kind of an order would you issue?

A. 146—Eng. 400, Thomas, is annulled as second one 1, from Omaha.

Q. 147—If there were no sections following the annulled section what would be necessary?

A. 147—I would add to the order "Following sections will change numbers accordingly."

Q. 148—If you desired to run an extra train, Louisville to Nashville, what form of order would you issue?

A. 148—Eng. 300, Smith, will run Extra Louisville to Nashville.

Q. 149—If you desired to run a train as an extra, Louisville to Nashville and return, how would you issue the order?

A. 149—Eng. 260, Brown, will run extra Louisville to Nashville and return to Louisville.

Q. 150—What about protecting extra trains against other extras and work extras?

A. 150—It should be done.

Q. 151—If you desired to run an extra over a division and give them right over all trains, what form of order would you issue?

A. 151—Eng. 500, Wilson, will run extra leaving Cleveland on Thursday, February 17, as follows, with right over all trains: Leave Cleveland eleven thirty 11:30 p. m., Cincinnati twelve twenty-five 12:25, a. m., Columbus one forty-seven 1:47 a. m. Arrive Buffalo two twenty 2:20 a. m.

Q. 152—How much would other trains receiving this order be required to clear this train?

A. 152—Ten minutes.

Q. 153—What form of order would you issue to a train that desired work between two points?

A. 153—Work extra 300, Wilson, will work seven 7:00 a. m. until six 6:00 p. m. between St. Paul and Minneapolis.

Q. 154—How would you combine a running order and a working order to a train?

A. 154—Work extra 400, White, will run Duluth to St. Paul and work ten 10:00 a. m. until six 6:00 p. m. between St. Paul and Minneapolis.

Q. 155—What is necessary before another extra can be authorized to run through the limits of a work extra?

A. 155—They must have a meeting point with the work extra.

Q. 156—What form of order would you issue to enable a work extra to work upon the regular time of a train up to a certain time?

A. 156—No. twenty-two 22, eng. 642, Johnson, will wait at Rome until five 5:00 p. m., for work extra 526, King.

Q. 157—When such order is issued what time will the work extra clear the main track?

A. 157—4:55 p. m.

Q. 158—What time would the regular train be permitted to leave if the work extra did not arrive?

A. 158—Five p. m.

Q. 159—What form of order would you issue in case you desired to hold all east bound trains at a certain point?

A. 159—Hold all east bound trains at Berlin.

Q. 160—Who would sign such an order?

A. 160—The operator.

Q. 161—After such an order had been issued and it was your desire to let a certain train proceed, what would be necessary?

A. 161—I would send an order to the operator as follows: "No. one 1 may go."

Q. 162—What form of order would you use in annulling a train?

A. 162—No. seventy-five 75, of February 29 is annulled Chicago to St. Paul.

Q. 163—Can a train so annulled be restored under its original number?

A. 163—No.

Q. 164—How would you issue an order to annul another order?

A. 164—Order No. twenty-five 25 is annulled.

Q. 165—In case the order that you wished to destroy has not been delivered to the train to whom should the annullment order be addressed?

A. 165—The operator.

Q 166—How would you issue an order to annul a certain part of another order?

A. 166—That part of Order No. ten 10, reading "No. one 1 eng. 67, Palmer, will meet No. two 2, eng. 58, King, at Sparta," is annulled.

Q. 167—From whom should "X" response be first received before giving O. K. to an annullment order?

A. 167—From the train to which right was given by the part annulled.

Q. 168—What form of order would you issue to change a meeting point?

A. 168—No. one 1, eng. 765, King, will meet No. two 2, eng. 642, Johnson, at Chicago instead of Omaha.

Q. 169—What form would you issue changing a point to which one train has right over another?

A. 169—Eng. 300, Smith has right over No. two 2, eng. 500, Wilson, to St. Louis instead of Louisville.

Q. 170—What order would you issue to change the point to which signals are to be displayed?

A. 170—No. one 1, eng. 498, Clark, will display signals for eng. 85, Smith, Denver to San Francisco instead of Oakland.

Q. 171—When issuing such superseding order from whom should "X" response be received before O. K. is given to any of the trains concerned?

A. 171—From the train to which right was given by the order superseded.

Q. 172—If, after working in limits given by train order, a work extra is obliged to go out of those limits for fuel, water or other purposes, and is given an order to run to such point and back to its working limit, can it go back to work on its original work order?

A. 172—No.

Q. 173—If, after giving one train right over another, you make a positive meeting point between such trains which will take siding at meeting point?

A. 173—The train first named in the right of track order.

Q. 174—If a third order is sent directing these two trains to destroy the order to make a positive meeting point what effect has the original right of track order?

A. 174—Right of track order remains valid.

Q. 175—What is your understanding of the following order: "Eng. 99, Jones, will run extra St. Louis to Chicago and has right over No. 2 two, eng. 135, Smith. Extra 99, North, Jones, will wait at Alton until eleven (11:00) A. M. for No. 2 two, eng. 135, Smith"?

A. 175—Eng. 99 will run Extra St. Louis to Alton without regard for No. 2; would wait at Alton until 11:00 A. M. for No. 2, and in case they failed to arrive would proceed to Chicago without regard for No. 2. No. 2 could leave Chicago by clearing the time of Extra 99 by 10:55 A. M.

YARDMASTERS' AND SWITCHMEN'S EXAMINATION.

Q. 1—What is the rule in regard to the use of liquor, the frequenting of places where liquor is sold and the use of tobacco?

A. 1—That the use of liquor and frequenting of places where

it is sold is prohibited. The use of tobacco is not permitted around passenger stations or on passenger trains.

Q. 2—What is a train?

A. 2—A train is an engine or more than one engine coupled, with or without cars, displaying markers.

Q. 3—What is a yard?

A. 3—A system of tracks within defined limits, provided for the making up of trains, storing of cars and other purposes, over which movements not authorized by time-tables or by train order may be made.

Q. 4—A yard engine?

A. 4—An engine assigned to yard service and working within yard limits.

Q. 5—How often is a certificate of watch inspection required?

A. 5—Every three months.

Q. 6—How often is it necessary to have watch compared by watch inspector?

A. 6—Weekly.

Q. 7—How often is it necessary for you to compare your watch with standard clocks, and what would you do if you did not have access to standard clocks?

A. 7—Daily. Before beginning work I would get the time from Train Dispatcher.

Q. 8—What is your duty in regard to obtaining a copy of each new time-table?

A. 8—I should provide myself with a copy.

Q. 9—Are you required to provide yourself with proper signals and keep them in good order?

A. 9—Yes.

Q. 10—Where should those giving signals station themselves?

A. 10—Where they can be easily seen.

Q. 11—If in doubt as to whom signals are intended for, what would you do?

A. 11—I would not move until satisfied the signal was for me.

Q. 12—When are night signals displayed?

A. 12—From sunset to sunrise, except in heavy weather when they should be displayed to suit requirements.

Visible Signals.

Q. 13—What does a red signal indicate? Green? Blue? Green and red? Green and white?

A. 13—Stop. Proceed. Car repairer's signal. Proceed with caution. Flag stop.

Q. 14—What does a green and red flag or light placed alongside of track indicate?

A. 14—The trains must run slowly and under full control.

Q. 15—What is the meaning of a fusee found burning on or near the track?

A. 15—A train overtaking such should wait until it is burned

out and then proceed cautiously until it is known that the track is clear.

Q. 16—What are the hand and lamp signals for the following: Stop? Proceed? Back? Train is parted? Apply air brakes? Release air brakes?

A. 16—Swung across track. Raised and lowered vertically. Swung in a short circle. Swung in a circle at arm's length. Swung horizontally at arm's length above the head. Held at arm's length above the head.

Q. 17—What is the meaning of any object waved violently by anyone on or near the track?

A. 17—It is a signal to stop.

Audible Signals.

Q. 18—What are the steam whistle signals for the following: Apply brakes? Release brakes? Flagman go back? Flagman return from West or North? Flagman return from East or South? Train parted? Answer to any signal? Back? Call for signal? When train is displaying signals? When approaching crossings? When approaching stations?

A. 18—One short. Two long. One long and three short. Four long. Five long. Three long. Two short. Three short. One long and two short. Two long and two short. One long.

Q. 19—What does a succession of short blasts of the whistle mean?

A. 19—It is an alarm signal for persons or stock on track.

Train Signals.

Q. 20—What lights must be displayed by yard engines at night?

A. 20—A headlight to the front and rear.

Q. 21—What is the meaning of two green flags carried on the front of an engine?

A. 21—That a section is following.

Q. 22—When cars are pushed by an engine, except when shifting or making up trains in yards, what signal should be displayed on the front of leading car at night?

A. 22—A white light.

Q. 23—What does a blue flag or light indicate?

A. 23—That car repairers are at work on cars on that track.

Q. 24—What about coupling on to a car thus protected?

A. 24—It must not be done without notifying workmen.

Q. 25—What about placing cars in front of a blue signal?

A. 25—It must not be done without notifying workmen.

Q. 26—What is the meaning of a signal improperly displayed or the absence of a signal where one is usually shown?

A. 26—It is a danger signal.

Q. 27—To which side should train keep when running on double track?

A. 27—To the right (or as the case may be).

Q. 28—What about occupying the main track against regular trains between yard limit boards?

A. 28—We should be protected by flagman.

Q. 29—What is the rule relative to speed over interlocking plants?

A. 29—Fifteen miles per hour.

Q. 30—When necessary to protect yourself by flag what signals should flagman take?

A. 30—Two torpedoes and a red flag by day and a red and white lantern and two fusees by night.

Q. 31—What is his first duty after leaving rear of train?

A. 31—Place fusee five hundred feet from rear of train.

Q. 32—At what rate should he go and how far?

A. 32—As fast as he can, three-fourths mile.

Q. 33—How far should he have an unobstructed view of approaching train?

A. 33—One-fourth mile.

Q. 34—When the required distance is reached how will torpedoes be placed?

A. 34—He must place one torpedo on engineman's side.

Q. 35—How long will he remain there?

A. 35—Until recalled or following train arrives and stops.

Q. 36—When flagman is recalled what precautions are necessary?

A. 36—He would place another torpedo 200 feet nearer his train than the first and return as fast as possible to his train. If train is not standing where track is straight one-fourth mile to the rear it should be moved ahead slowly until a clear view can be had for that distance.

Q. 37—When cars are pushed by an engine, except when shifting or making up train, what post should flagman take?

A. 37—On the front of the leading car.

Q. 38—What is necessary when switching over highway, street or railway crossings?

A. 38—A man should be stationed at crossing as flagman.

Q. 39—What is the rule in regard to moving cars over highway crossings and in front of passenger stations detached from engines?

A. 39—It is not allowed.

Q. 40—What is necessary when switching cars containing passengers?

A. 40—They should be coupled to engine and air cut in.

Q. 41—Who is responsible for the proper position of switches after using them?

A. 41—The yard foreman.

Q. 42—What is required when it is necessary to use a switch connected with distant signal and distant signal cannot be seen from switch?

A. 42—The signal should be placed at danger and we should

then wait until satisfied that no train is approaching between distant signal and switch.

Q. 43—At meeting or passing points where will employe attending switch station himself after switch has been locked for main track?

A. 43—Not less than thirty feet from switch.

Q. 44—What is necessary in case of doubt or uncertainty?

A. 44—We must not take any chances.

Q. 45—What position or light does a home signal show at interlocking plants when at "stop" and "proceed"?

A. 45—When at stop it will show a horizontal arm at the right of the mast, and at night a red light. When clear it will show a diagonal or vertical arm by day and a green or white light by night.

Q. 46—How does the distant signal show?

A. 46—It shows diagonal or vertical arm or a green or a white light when clear, and a horizontal arm and a green, or a yellow, or a red and green light when at caution.

Q. 47—What movement does a dwarf signal indicate?

A. 47—A diverging movement from the main track.

Q. 48—What persons are allowed to ride on cars or assist in switching?

A. 48—None but trainmen or switchmen.

Q. 49—What is the rule about riding on locomotive pilots?

A. 49—It is prohibited.

Q. 50—How should switches at track scales be left when scales are not in use?

A. 50—Switches should be set for the dead rail.

Q. 51—How should turn-table be left after using?

A. 51—Locked.

Q. 52—Where should empty flat cars and oil tanks be placed in train?

A. 52—In the rear of train.

Q. 53—If more than one locomotive is to be towed in one train what is necessary?

A. 53—To place at least three box or stock cars between them.

Q. 54—What about moving cars that persons are loading or unloading?

A. 54—It must not be done until parties are notified.

Q. 55—What is the rule about obstructing street or road crossings?

A. 55—It must not be done.

Q. 56—Where should cars containing live stock be switched in train?

A. 56—Next to caboose.

Q. 57—When freight cars are hauled in passenger trains where should they be placed?

A. 57—Next to engine.

Q. 58—What is necessary when any person is injured?

A. 58—They should be given all care possible and company's surgeon called.

Q. 59—If company surgeon cannot be had what should be done?

A. 59—Call the nearest competent surgeon.

Q. 60—When persons trespassing on company's property are injured what should be done with them, and should any expense be incurred by the company?

A. 60—They should be sent to their homes or left in charge of authorities and no expense should be incurred by the company.

Q. 61—Should you witness any accident on the company's property or should anyone inform you of such what is your duty?

A. 61—To make report of same.

Q. 62—When persons are injured while coupling or uncoupling cars or in any way in which the accident may have been caused by defective appliances or machinery, what is necessary?

A. 62—The cars should be examined by those in charge, or a car inspector, and report made of such inspection.

Q. 63—When it is necessary to detach defective parts from cars what should be done?

A. 63—They must be placed inside the car from which they were detached.

Air Brakes.

Q. 64—When detaching locomotive or cars upon which air is in use what is necessary?

A. 64—To close the cocks in the train pipe at the point of separation and then part the couplings by hand.

Q. 65—If the couplings are found frozen or covered with ice what is necessary?

A. 65—Ice should be removed and couplings thawed out.

Q. 66—If brakes stick or wheels slide what should be done?

A. 66—The engineman should be notified.

Q. 67—If engineman cannot release brakes how can release be effected?

A. 67—The bleed cocks in the auxiliaries should be opened.

Q. 68—When air brakes are not in use how should hose be left?

A. 68—Either coupled up or hanging down.

Q. 69—When making up train where should air brake cars be switched?

A. 69—In the head end of train.

Q. 70—When tail hose is used from what part of train should brakes be tested?

A. 70—From the rear end.

Q. 71—What care should be exercised in applying air with tail hose?

A. 71—They must be used carefully to prevent emergency application.

Q. 72—What is necessary before moving cars from side track?

A. 72—To see that hand brakes are released and wheels are not sliding.

Q. 73—When setting out air brake cars what is necessary before setting hand brakes?

A. 73—To bleed the auxiliary.

Q. 74—If auxiliary is not bled what would be the result?

A. 74—It would be liable to break the brake chains or release the brakes.

AGENTS' AND OPERATORS' EXAMINATION.

Q. 1—What is the rule in regard to the use of liquor, the frequenting of places where liquor is sold, and the use of tobacco?

A. 1—The use of liquor, and the frequenting of places where sold, is prohibited, and the use of tobacco in the vicinity of passenger stations or on passenger cars is not allowed.

Q. 2—What is your understanding in regard to your wearing uniform while on duty?

A. 2—The prescribed uniform should be worn while on duty.

Q. 3—Is a lone engine considered a train?

A. 3—Yes.

Q. 4—When are night signals displayed?

A. 4—From sunset to sunrise, except in heavy weather when they will be displayed to suit requirements.

Q. 5—What signal is used to stop a train at flag station for passengers?

A. 5—A green and white signal.

Q. 6—If signals displayed for a following train are taken in at your station before following train arrives, what is the duty of the operator?

A. 6—To display signals against opposing trains until following section arrives.

Q. 7—What are you to furnish conductors and enginemen at your station when no orders have been received for them?

A. 7—A clearance.

Q. 8—If orders have been received, but for another train, what would be required?

A. 8—A release.

Q. 9—After receiving an order for a train are you allowed to clear your signal for another train and then reset it at danger?

A. 9—No.

Q. 10—What about erasures, alterations, interlineations, or figures surrounded by brackets, circles, or anything of that nature in train orders?

A. 10—They are not allowed.

Q. 11—To whom are train orders addressed?

A. 11—To those who are to execute them.

Q. 12—What persons should receive a copy?

A. 12—Enginemen, conductors and those acting as pilots.

Q. 13—What does the signal "31" mean?
A. 13—To clear the line for train orders.
Q. 14—In case you cannot make the required number of copies of an order at one writing what is necessary after making additional copies?
A. 14—To repeat the rewritten copy to the train dispatcher.
Q. 15—What is your understanding of the "X" signal followed by your personal signature?
A. 15—It is a pledge to hold the train to whom the order is addressed and deliver order to same.
Q. 16—What is required of you when other operators are repeating an order which has also been sent to you?
A. 16—To see that the order is repeated correctly.
Q. 17—What is required of a conductor upon his arrival at a station at which orders have been received for him?
A. 17—To read the order and sign if understood.
Q. 18—Explain your understanding of an intermediate order and how you would execute same?
A. 18—It is an order sent to an operator at actual meeting point, and operator should sign same, and upon arrival of either train mentioned in the order he should deliver the order to that train.
Q. 19—How would you proceed to "X" an order?
A. 19—I would first give the order number, then the address; then the "X" response followed by my personal signature and office call.
Q. 20—Can an order be delivered to train after "X" response is given and before an O. K. is given by the train dispatcher?
A. 20—No.
Q. 21—If the line fails before you have sent "X" response to an order how should the order be treated?
A. 21—As if it had not been sent.
Q. 22—Who would retain a copy of all orders besides those to whom they are addressed?
A. 22—The operator.
Q. 23—Suppose you receive an order for a train at some point other than your station, in care of some other train, to whom would you deliver said order and how many copies would you furnish?
A. 23—I would deliver it to the conductor in whose care it was sent and would furnish him copy for himself and enginemen and conductor of train to which it is to be delivered.
Q. 24—Suppose you receive an order at your station addressed to "C. & E. No. one (1)," and when No. 1 arrives at your station you discover that they are displaying signals for a following train, what is your duty?
A. 24—To see that each section of the train has a copy of the order.

Q. 25—Have you the right to "X" an order for a train after the engine has passed your train order signal?

A. 25—No, not until the conductor understands I have orders for him.

Q. 26—If after having delivered an order for a train subsequent order is received for the same train, and the train is still at your station, do you consider the train order signal sufficient to hold the train?

A. 26—No.

Q. 27—Describe the position of the "Nun" and "Semaphore" signals when at stop and when at proceed?

A. 27—The NUN signal will show a red board or light when at danger, and no board or a green light when clear. A semaphore signal will display a horizontal arm at the right of the mast, or red light when at danger, or a diagonal or vertical arm at the right of the mast, or a green or white light when clear.

Q. 28—What is necessary before you send the "X" response to a train order?

A. 28—To display my train order signal.

Q. 29—What signal should you have on hand at all times in addition to the train order signals?

A. 29—A red hand signal.

Q. 30—What is necessary to annul an order?

A. 30—An order directing to do so.

Q. 31—What is your understanding of the following order, "Hold all east bound trains at Chicago?"

A. 31—The operator will be required to hold all east bound trains as directed in the order.

Q. 32—How long would you hold east bound trains and who would be required to sign the order?

A. 32—Until the order is annulled and the operator will be required to sign the order.

Q. 33—Do you understand that it is extremely dangerous to report a train as having not passed until you are absolutely sure of that fact?

A. 33—Yes.

Q. 34—Who is held responsible for the proper working of train order signal?

A. 34—The operator.

Q. 35—When train order signal is out of order what should be done?

A. 35—The train dispatcher should be notified.

Q. 36—Who is held responsible for position of switches at a station and who must know before leaving station at night that switches are locked on main track and cars on side track are properly secured?

A. 36—The agent.

Q. 37—When perishable property is received at your station and you have no disposition for same what is your duty?

Q. 63—When an accident at your station results in the death of any person what is your duty?

A. 63—To notify the Superintendent and family or friends of the deceased.

Block Signals.—Ten Minute Block.

Q. 64—When do you consider that a train has passed your station?

A. 64—When the rear car displaying markers has passed the signal.

Q. 65—How long after a train has passed will you hold your signal at danger?

A. 65—Ten minutes.

Q. 66—Are there any exceptions to this rule; if so, what are they?

A. 66—Only when the train dispatcher issues a caution card for a train to enter a block before ten minutes have elapsed.

Controlled Manual Block System.

Q. 67—How should signalman record trains?

A. 67—Signalmen will enter all trains reported into block from either direction, on block register, commencing 12:01 a. m. daily. The last train entering or leaving the block must be the last reported.

Q. 68—If a train has passed any station should it be re-entered upon the block register sheet?

A. 68—Yes.

Q. 69—What should be the last train recorded?

A. 69—The last train entering or leaving the block.

Q. 70—What is the signal to the block in advance to "Block all South or East bound trains?"

A. 70—B 2.

Q. 71—What is the signal to block in advance to "Block all North or West bound trains?"

A. 71—B 9.

Q. 72—What is the answer to these signals when block is clear and when not clear?

A. 72—When the block is clear the answer is "I 13 B 2 for ———" or "I 13 B 9 for ———." When the block is not clear the answer should be "Block not Clear."

Q. 73—What is necessary before you can allow a train to enter a block?

A. 73—To execute all orders then ascertain if block in advance is clear.

Q. 74—When there are no orders and the block ahead is clear for an approaching train is it necessary that you stop the approaching train?

A. 74—No.

ar
de

ock

cupied

unicate

; would
sed since

r a caution
not be had,
19

A. 87—Notation should be made on caution card directing conductor and enginemen to stop at next station and ascertain the trouble.

Q. 88—Should part of a train run back in the wrong direction what is the duty of signalman?

A. 88—He should notify the signalman toward whom the detached part is running.

Q. 89—What should the signalman do who receives such notice?

A. 89—He should stop any train on the same track running in the opposite direction, and do everything possible to prevent a collision.

Q. 90—When informed of any obstructions in a block what is required of signalman?

A. 90—He should place signal at danger and notify the signalman at the other end of the block, who will also display stop signal.

Q. 91—When can the signal be replaced to clear?

A. 91—When the obstruction is removed.

Q. 92—If necessary to stop a train after having given them a clear signal or caution card how should this be done?

A. 92—By hand signal.

Q. 93—When opening a block station what is required of signalmen?

A. 93—Signalman must give notice to the next block station, in each direction, and record the trains that are in the extended block. He must then display the normal signal indication and notify the block station, in each direction, that the station is opened.

Q. 94—What notice should he give block stations in each direction?

A. 94—He should notify them that the signal office is open.

Q. 95—When trains which were in the extended block when the station was opened and had passed your station before it was opened, clear the block in advance what is required of you?

A. 95—I must report the record to the block station in the rear.

Q. 96—When can a block station be closed?

A. 96—Upon authority from the train dispatcher. It should not be done when trains are approaching which are to meet or pass at that station.

Q. 97—In closing a block station what information should he give each block station, in either direction, and what entry should he make in his block register?

A. 97—He must first obtain report for train which he had admitted to the block in either direction; then he should give notice to the next block station, in either direction, and transfer the records of the train in the extended block; he should then enter on his block record the time O. K. if transfer is received; he should then clear the block and extinguish lights.

Q. 98—How should the wire be arranged when closing a block station?

A. 98—It should be arranged so it would work through the station closed.

Q. 99—What danger signals should the signalman have on hand in addition to the block signal?

A. 99—Torpedoes, fusees, green and red flags, and green, white and red lanterns.

Q. 100—When one signalman relieves another what is required?

A. 100—He should take receipt of transfer of block register sheet from signalman relieving him.

Q. 101—Who must know that block signals show the proper indication?

A. 101—The signalman.

BRAKEMEN AND BAGGAGEMEN'S EXAMINATION.

Q. 1—What is the rule in regard to the use of liquor, the frequenting of places where liquor is sold and the use of tobacco?

A. 1—The use of liquor or the frequenting of places where sold is prohibited. The use of tobacco around passenger stations and on passenger cars is not allowed.

Q. 2—Where should those giving signals station themselves?

A. 2—Where they can be plainly seen.

Q. 3—What is necessary in case any signal seen by you may be intended for another train?

A. 3—Should not move until satisfied that signal is for us.

Q. 4—When are night signals displayed?

A. 4—From sunset to sunrise, except in heavy weather, when they should be displayed to suit requirements.

Visible Signals.

Q. 5—What does red signal signify? Green? Blue? Green and red? Green and white?

A. 5—Stop. Proceed. Car Repairer's signal. Caution. Flag stop.

Q. 6—What does a combination of green and red flag or light set alongside of main track indicate?

A. 6—Proceed with caution.

Q. 7—When a fusee is found burning on or near the track what does it indicate?

A. 7—The train should stop and not proceed until it has burned out, and then cautiously, expecting to find the track blocked.

Q. 8—What is the hand or lamp signal to stop? Proceed? Back? Train parted? Apply air brakes? Release air brakes?

A. 8—Swung across the track. Raised and lowered vertically. Swung in a short circle. Swung in a circle at arm's length. Swung horizontally at arm's length above the head. Held at arm's length above the head.

Q. 9—What is the meaning of any object waved violently by anyone on or near the track?

A. 9—It is the signal to stop.

Audible Signals.

Q. 10—What does one short blast of the steam whistle indicate? Two long? One long and three short? Four long? Five long? Three long? Two short? Three short? Four short? One long and two short? Two long and two short? One long?

A. 10—Stop. Release brakes Send out flagman. Flagman return from west or north. Flagman return from east or south. Train parted. Answer to any signal not otherwise provided for. Back. Call for signals. To call attention to signals carried. Public highway crossing whistle. Station, railway crossing, etc.

Q. 11—What does a succession of short blasts of the whistle mean?

A. 11—It is an alarm signal for persops or stock on track.

Q. 12—What does the explosion of one torpedo indicate?

A. 12—It means to stop.

Q. 13—What is the meaning of two torpedoes not more than two hundred feet apart?

A. 13—It means to proceed cautiously until it is known that track is clear.

Q. 14—What are the air whistle signals for the following: When brakes stick or wheels slide? When train is running to stop at once? When train is running to stop at next station? When train is standing to apply or release air brakes? When train is running to reduce speed? When train is standing to call in flagman? When train is running to increase speed?

A. 14—One whistle. Two. Three. Four. Four. Five. Five.

Train Signals.

Q. 15—What signals are required on the rear of every train as markers by day and by night?

A. 15—By day a green flag at each side; at night a green light to the front and a red light to the rear on each side.

Q. 16—How are these signals displayed by night when running?

A. 16—A red light should be displayed to the rear on each side.

Q. 17—How displayed when you get into clear on a siding to meet or be passed by a train?

A. 17—A green light should be displayed to the rear.

Q. 18—When should markers be removed when on the arrival of a train at a terminal?

A. 18—When train gets into a clear and switches are closed.

Q. 19—How are letters and figures placed in a caboose cupola on regular trains, its section and extra trains?

A. 19—An extra will show the letters EXTRA. A regular train will show its numbers in the upper sash. If a section to a train it will show train number in upper section and number of sections

in lower sash. The last section will show the letters "L. S." in the lower sash.

Q. 20—What is the meaning of two green flags by day and in addition two green lights by night displayed on the front of an engine?

A. 20—That a section is following.

Q. 21—What is the meaning of two white lights displayed on the front of an engine?

A. 21—It means that the train carrying them is an extra.

Q. 22—When cars are pushed by an engine what should be displayed on the front of the leading car by night?

A. 22—A white light.

Q. 23—How must each car in a passenger train be connected with engine by signal appliance?

A. 23—Each car should be so connected.

Q. 24—What does a blue flag or a blue light indicate?

A. 24—It means that car repairers are at work under or about the cars on that track.

Q. 25—What is your duty when a blue signal is displayed?

A. 25—We must not move the cars without first notifying the workmen.

Q. 26—How about placing cars in front of a blue signal?

A. 26—It must not be done without first notifying workmen.

Q. 27—What is the meaning of a signal improperly displayed or the absence of a signal where one should be shown?

A. 27—It is a danger signal.

Q. 28—For what purpose is the combination of green and white signal used?

A. 28—To flag trains for passengers.

Q. 29—What is necessary before a train can be started from a station?

A. 29—A signal from the conductor.

Q. 30—What speed are passenger and freight trains limited to when passing over interlocking switches?

A. 30—Passenger trains 25 miles per hour; freight trains 15.

Q. 31—When a train stops between stations or is delayed under circumstances by which it may be overtaken by other trains what is your first duty?

A. 31—To protect the train by flag.

Q. 32—Is it necessary to wait for instructions from a conductor before protecting your train?

A. 32—No.

Q. 33—What signals must a flagman take?

A. 33—Two torpedoes, a red flag by day and a red and white lantern and two fusees by night.

Q. 34—At night what is his first duty after leaving rear of train?

A. 34—To place a fusee 500 feet from the train.

Q. 35—At what rate should he go and how far?

A. 35—As fast as he can, three-quarters mile.

Q. 36—How far should he have an unobstructed view of an approaching train?

A. 36—One-fourth mile.

Q. 37—When the required distance is reached how will torpedoes be placed?

A. 37—He should place one torpedo on engineman's side.

Q. 38—How long will he remain there?

A. 38—Until recalled.

Q. 39—When flagman is recalled what precaution is necessary?

A. 39—He must place another torpedo 200 feet nearer his train than the first and then return as fast as possible to his train.

Q. 40—Should the speed of a train be so reduced that it would check the speed of a following train before flagman can get back the required distance, what is necessary?

A. 40—A lighted fusee should be thrown off on track.

Q. 41—What is necessary before train can be backed on the main track?

A. 41—A flagman must be sent back in advance of the rear end of the train, and kept far enough in advance to insure absolute safety against a collision with any train that may be approaching.

Q. 42—When a flagman goes back to protect the rear of a train who takes his place?

A. 42—The head brakeman or baggageman.

Q. 43—If a train breaks in two while in motion what is the duty of all concerned?

A. 43—To give signals and use other precautions to protect the detached parts.

Q. 44—What action should be taken relative to the front portion of the train?

A. 44—It should be kept in motion until it is ascertained that the rear portion has stopped.

Q. 45—After it has been ascertained that the rear portion has been stopped what is required and what precaution must be taken?

A. 45—Care should be taken in backing the head end to prevent collision of the detached parts.

Q. 46—When practicable what should be done with the front portion?

A. 46—It should be side tracked.

Q. 47—What should be ascertained before engine is backed with cars attached to the rear portion?

A. 47—It should be known positively that the rear portion has stopped.

Q. 48—Would you consider it necessary to examine the draft rigging on the rear of rear car before backing up?

A. 48—Yes.

Q. 49—What precautions must be taken when cars are being pushed or backed over crossings?

A. 49—A flagman should be statipned on the front of the leading car.

Q. 50—What is necessary when switching is being done over a highway, or street or railway crossing?

A. 50—A man should be stationed at the crossing to act as flagman.

Q. 51—What about moving cars detached from engine over highway crossings or in front of passenger stations?

A. 51—It is not permitted.

Q. 52—When switching cars containing passengers what is necessary?

A. 52—They must be coupled to engine and air in working order.

Q. 53—Should a train leave a switch open for a following train, if so, under what circumstances?

A. 53—Not unless a trainman from the following train is left in charge of it.

Q. 54—What is your duty when necessary to use a switch connected with a distant signal and the distant signal cannot be seen from the switch?

A. 54—The signal must first be set at danger and we should then wait until satisfied that no train is approaching between distant signal and switch.

Q. 55—At meeting or passing points of trains where will party employed in attending switch station himself after locking same?

A. 55—At least thirty feet from the switch.

Q. 56—What is your duty in regard to handling passengers on freight train and stopping at platform for them?

A. 56—Proper announcement should be made at stations and caboose should be stopped at platform and passengers assisted to and from train.

Q. 57—What is necessary in case you discover any damage, to track, bridges or culverts, etc.?

A. 57—To call attention of conductor to same and see that other trains are protected.

Q. 58—In case of doubt what is your duty?

A. 58—Not to take any chances.

Q. 59—Do you consider it your duty to see that conductor allows you to read all train orders received?

A. 59—Yes.

Q. 60—How long before leaving time should trainmen be on hand?

A. 60—Thirty minutes.

Q. 61—What is required in examining trains before starting on a run and at all stopping points?

A. 61—It must be done to see that everything is in good order.

Q. 62—What is required of head brakemen on freight trains in the way of assisting enginemen in observing signals?

A. 62—It must be done.

A. 92—The conductor's.

Q. 93—Is it necessary that train baggagemen provide themselves with a book of rules and regulations issued by the General Baggage Agent and observe the instructions therein?

A. 93—Yes.

Q. 94—What about chairs in caboose cars?

A. 94—They are only allowed in cupolas and should be fastened.

Q. 95—What persons are allowed to ride cars and assist in switching?

A. 95—Trainmen and switchmen only.

Q. 96—What is the rule about riding on the locomotive pilot?

A. 96—It is not allowed.

Q. 97—At track scales how would switches be left when scales are not in use?

A. 97—They should be set for the dead rails.

Q. 98—How should turn tables be left after using?

A. 98—Locked.

Q. 99—Where should empty flats and tanks be placed in train?

A. 99—In the rear of train.

Q. 100—What are the instructions relative to detaching engines from freight trains of over twenty cars when taking coal or water?

A. 100—It must not be done.

Q. 101—What about freight car doors being kept closed?

A. 101—They must be kept closed when not in use.

Q. 102—What is necessary before receiving a corpse for transportation?

A. 102—It should be accompanied by a physician's certificate or a certificate from the coroner, or permit for transportation from the Clerk of the Board of Health; and also a certificate from the undertaker, showing that the person did not die of a contagious disease.

Q. 103—Will uncheeked articles or baggage other than company supplies be received for transportation in baggage cars?

A. 103—No.

Q. 104—What is the rule in regard to carrying packages containing money in baggage cars?

A. 104—It is not allowed.

Q. 105—What class of mail will be carried in baggage cars as railway business?

A. 105—Only that which pertains to the railway service.

Q. 106—What care is required of trainm

A. 106—It should be carefully handled

Q. 107—What is the rule in regard to re

A. 107—It is not allowed.

Q. 108—What about persons soliciting a

A. 108—It is prohibited.

Q. 109—Should you witness an a

Q. 78—What is the rule about handling gun-powder, dynamite, gasoline, or similar explosives on passenger trains?

A. 78—It is not allowed.

Q. 79—What is required of passenger train employes relative to watching journals, brakes and other part of trains for defects?

A. 79—It must be done whenever possible.

Q. 80—What about keeping a lookout for signals from other trains and stations?

A. 80—It must be done.

Q. 81—Outside of suburban districts where will the rear brakeman station himself until train has passed outer switches?

A. 81—On the rear platform of rear car.

Q. 82—Where must freight cars be placed when hauled in passenger trains and how should they be equipped?

A. 82—In the head end of the train and they should be equipped with air brakes.

Q. 83—What is the rule in regard to begging and gambling on a passenger train?

A. 83—It is not allowed.

Q. 84—What are the duties of a passenger brakeman when a stop is made at a station?

A. 84—He should assist passengers to and from the train and see that they are properly ticketed and that they are taking the right train.

Q. 85—Where is the post of the rear brakeman?

A. 85—On the rear car.

Q. 86—What care must be taken in handling baggage, train mail, etc., and who will be held responsible?

A. 86—Care should be taken to prevent damage or loss to same and the train baggageman is held responsible for same.

Q. 87—Where shall train baggageman remain and when can he leave his car?

A. 87—He shall remain in the baggage car unless otherwise ordered by the conductor.

Q. 88—How should the baggage doors be kept and what persons are allowed in baggage car?

A. 88—They must be kept locked and no person except those whose business requires them to be there should be allowed in the baggage car.

Q. 89—Where should overhead steam hose be kept when detached?

A. 89—In the racks on the west or north end of car.

Q. 90—When can a passenger train be moved after it has stopped at a platform?

A. 90—After all passengers have alighted.

Q. 91—What treatment is required towards passengers on the part of trainmen?

A. 91—Polite and courteous treatment.

Q. 92—Under whose charge are brakemen and baggagemen?

A. 122—I would replace the hose and test the brakes before proceeding.

Q. 123—How will brakes to the rear of broken hose be released?

A. 123—They must be released by hand.

Q. 124—When air brakes are not in use how should the hose be left?

A. 124—Either coupled up or hanging down.

Q. 125—When pressure retaining valve is to be used what action is necessary by trainmen at the top and foot of all grades?

A. 125—The brakes should be tested at the top of the grade and we should then pass over the train and turn the handle of the pressure retaining valve horizontally upon the cars. At the foot of the grade the handles must be turned down again.

Q. 126—Should the car discharge valve upon any car be found defective while on the road how can it be cut out?

A. 126—By closing the cock in the branch pipe leading to the valve.

Q. 127—To whom would you report defective air brake or air signal apparatus?

A. 127—To the conductor.

Q. 128—What is necessary when using air signals to convey signal to engineer distinctly?

A. 128—We should pull down upon the cord for one full second and allow two seconds to pass between pulls.

Q. 129—Where should air brake cars be placed in a train?

A. 129—In the head end.

Q. 130—When passenger trains are charging what must brakeman do to see that air signal is cut in on each car?

A. 130—He must test the signal from each car.

Q. 131—When tail hose is used where do you test brakes?

A. 131—From the rear of train.

Q. 132—When backing up passenger trains what must be used at rear end of train?

A. 132—A tail hose.

Q. 133—When do you apply air brakes on passenger trains when backing?

A. 133—Before the train is moved 200 feet.

Q. 134—Should you apply the air carefully when using tail hose?

A. 134—Yes.

Q. 135—How do you make a stop when using tail hose?

A. 135—By allowing the air to flow gradually from the tail hose.

Q. 136—What will release the brakes?

A. 136—By closing the valve in the tail hose.

Q. 137—When picking up the air brake cars when should you cut in air?

A. 137—As soon as draw bar couplings are made.

Q. 138—What should you do before opening angle cocks?

A. 138—See that cock at rear is closed.

Q. 139—Where should hand brakes be used on trains containing air?

A. 139—Behind the air cars.

Q. 140—Where should hand brakes be set on trains when backing?

A. 140—The rear end of train.

Q. 141—In setting out air brake cars what should be done before setting hand brakes?

A. 141—The auxiliary should be bled.

Q. 142—If auxiliary is not bled what would be the result?

A. 142—It would be liable to break the brake chain or release the brake.

Q. 143—Describe the position of "Nun" and "Semaphore" signals when "Stop" and "Proceed?"

A. 143—The NUN signal will show a red board or light when at danger, and no board or a green light when clear. A semaphore signal will display a horizontal arm at the right of the mast, or red light when at danger, or a diagonal or vertical arm at the right of the mast, or a green or white light when clear.

EXAMINATION OF TRACK, BRIDGE AND BUILDING FOREMEN.

Q. 1—Have you received a copy of the Rules and Regulations of the Railway Company, taking effect ——————————, 19——, and do you understand that they supersede all previous Rules and Regulations?

A. 1—Yes.

Q. 2—Have you read the Rules and Regulations and are you conversant with them and will you obey the instructions contained therein?

A. 2—Yes.

Q. 3—Do you understand that in accepting employment you assume its risks, and that each employe is responsible for his own safety and must exercise care to avoid injury to others?

A. 3—Yes.

Q. 4—What is the rule in regard to the use of liquor, the frequenting of places where liquor is sold, and the use of tobacco?

A. 4—The use of liquor and the frequenting of places where it is sold is prohibited. The use of tobacco is not permitted around passenger stations or on passenger trains.

Q. 5—Where must those giving signals station themselves?

A. 5—Where they can be plainly seen.

Q. 6—When are night signals displayed?

A. 6—From sunset to sunrise, except in heavy weather, when they should be displayed to suit requirements.

Q. 7—What is the hand or lamp signal to stop?

A. 7—The hand or lamp swung horizontally across the track.

Q. 8—In case the condition of track is such that it is necessary for trains to pass over it slowly, what signal would you use and how would it be placed?

A. 8—A green and red flag or light should be placed upon the side of the track at a sufficient distance.

Q. 9—What does a red flag or light indicate?

A. 9—Stop.

Q. 10—What does a green flag or light indicate?

A. 10—Proceed.

Q. 11—What do green signals carried on the front of an engine indicate?

A. 11—That a section is following.

Q. 12—When you discover anything which requires you to flag a train how should it be done, and what signals should flagman take?

A. 12—A flagman should be sent back with two torpedoes; a red flag by day and a red and white lantern by night.

Q. 13—At what rate should flagman go and how far?

A. 13—As fast as he can go, three-fourths mile.

Q. 14—How far should he have an unobstructed view of approaching trains?

A. 14—One-fourth mile.

Q. 15—How long will he remain there?

A. 15—Until recalled.

Q. 16—If in doubt or in case of uncertainty, what is required?

A. 16—To take no chances.

Q. 17—What is required of you when anyone other than trespassers are injured?

A. 17—To give them all the care possible and call the nearest company surgeon.

Q. 18—What is necessary when Company's surgeon cannot be had?

A. 18—To call the nearest competent surgeon.

Q. 19—What is to be done with persons injured while trespassing on the Company's property?

A. 19—They should be sent home or placed in charge of authorities.

Q. 20—Should any expense be incurred by the Company?

A. 20—None.

Q. 21—If you witness an accident on the Company's property, or any one informs you of such, what is your duty?

A. 21—To make report of same.

Q. 22—When an accident results in death what should be done with remains?

A. 22—They should be taken to the nearest station.

Q. 23—What about removing remains outside of County or State in which accident happens?

A. 23—It should not be done.

Q. 24—What about track and bridge foreman supplying themselves with current time-table and becoming familiar with contents of same?

A. 24—It should be done.

Q. 25—What about providing yourself with a reliable watch and comparing time?

A. 25—It should be done.

Q. 26—When intoxicated or insane persons and others unable to care for themselves are found on the right of way, what should be done?

A. 26—They should be protected from trains and removed from the Company's property as soon as possible.

Q. 27—At what point should track foreman report daily?

A. 27—At the telegraph office.

Q. 28—What is required of you in regard to keeping proper record of time worked by your men?

A. 28—It should be done by foreman.

Q. 29—What is required of track foremen in the way of inspecting their sections and how often is this necessary?

A. 29—It should be done at least once each day by a competent man.

Q. 30—Who is responsible for the condition of bridges, culverts and other waterways?

A. 30—Bridge foreman.

Q. 31—With what danger signals should track and bridge foremen be supplied?

A. 31—Twelve torpedoes, two red flags, two white flags and two red lanterns.

Q. 32—What is required of bridge and track foremen relative to observing trains for any signals carried?

A. 32—They should take notice of all passing trains for any signals carried.

Q. 33—What about seeing that frogs, guard rails and switch rails are properly blocked and crossings properly planked?

A. 33—Track foreman should see that it is done.

Q. 34—What is required of foremen in regard to fences, cattle guards, etc., being kept in repair?

A. 34—It is the duty of the foreman to see that it is done.

Q. 35—What would you do in case parties were in the habit of leaving gates and bars open?

A. 35—I would notify the Roadmaster.

Q. 36—When necessary to flag a train, how should torpedoes be placed?

A. 36—One torpedo should be placed on the engineman's side.

Q. 37—When track jacks are used which side of rail should they be placed on?

A. 37—The outside.

Q. 38—What protection is necessary when track jacks are being used?

A. 38—A green and red flag should be placed on the engineman's side at least three-fourths mile in either direction.

Q. 39—What about allowing track jack, ties and other tools or material being placed on the track when not needed for immediate use?

A. 39—It is not allowed.

Q. 40—To what distance should caution flags be placed and what is necessary in placing them?

A. 40—At least three-fourth miles. They should be set on two standards at least four feet high.

Q. 41—What is necessary when trains disregard your signal?

A. 41—It should be reported to the Superintendent.

Q. 42—What persons are allowed to ride on hand car?

A. 42—Only employes in discharge of their duty.

Q. 43—When two or more hand cars are following each other what distance apart should they keep?

A. 43—At least three hundred feet.

Q. 44—What about allowing hand and velocipede cars on the track belonging to private parties?

A. 44—It is not permitted.

Q. 45—What is necessary when running hand and velocipede cars after dark?

A. 45—They should display two red lanterns, so that they can be seen from either direction.

Q. 46—What about attaching hand, dump and velocipede cars to moving trains?

A. 46—It is not allowed.

Q. 47—What about running same in foggy weather?

A. 47—It should not be done unless protected by flagman.

Q. 48—What about taking hand cars from track at public and private crossings?

A. 48—It should not be done except to avoid an approaching train.

Q. 49—To what distance should material be piled from any track?

A. 49—At least six feet.

Q. 50—What about allowing old ties, fencing, detached parts of cars and other material to be scattered on the right of way?

A. 50—It should not be done.

Q. 51—What about protecting property against fire?

A. 51—Everything should be done to protect the Company's property and property adjoining it.

Q. 52—What notice should foreman give Master Mechanic

when he has reasons to think that an engine has started a fire and how will this information be given?

A. 52—He should notify the Master Mechanic by postal card provided for that purpose.

Q. 53—In case of damage by fire to Company's or other property what report should foreman make?

A. 53—He should make a report to the Roadmaster on prescribed form.

Q. 54—What report should foreman procure from owner of destroyed property?

A. 54—He should procure same from owner on form provided for that purpose.

Q. 55—What is the duty of foreman in case of violent winds or rainstorms or sudden rise of streams?

A. 55—He should carefully examine track, bridges, and culverts and notify approaching trains of any danger.

Q. 56—What is the duty of trackman when telegraph wires are found obstructed?

A. 56—He should make temporary repairs and report to the Train Dispatcher by wire.

Q. 57—Who should examine warning whips at overhead bridges, etc., and keep them in good condition?

A. 57—Track foreman.

Q. 58—What report should Section Foreman make when live stock is injured or killed?

A. 58—He should make report to Roadmaster on form provided.

Q. 59—Whom should foreman notify when stock is killed?

A. 59—The owner of same.

Q. 60—If owner does not take charge of the animal what should foreman do?

A. 60—Bury the animal and dispose of hide to best advantage.

Q. 61—Who is held responsible for tools and material and where should such be kept when not in use?

A. 61—The foreman is responsible; they should be kept in the tool house.

CHAPTER XVIII.

MOVEMENT OF TRAINS BY TELEPHONE.*

In recent years train dispatching by telegraph has been supplemented by the use of the telephone for the transmission of train orders. Its practicability has been demonstrated and it is claimed that in many respects it is much safer, surer and quicker than the telegraph.

One of its advantages is that it enables dispatchers and train crews to come into closer touch and so establishes closer personal relations, thereby putting dispatchers in possession of all the details so essential in facilitating the movement of heavy traffic. Another advantage is the fact that in emergencies, train crews can place themselves in immediate and direct communication with dispatchers from any points between stations.

The following specific rules and regulations in regard to the use of the telephone in the movement of trains are typical of those in force upon railways which use the telephone in this connection:

1. The rules and regulations governing the movement of trains

* A description of methods used in adapting the telephone to the movement of trains will be found in a volume of the "Science of Railways" series, treating of Electricity Applied to Railways.

by telegraph should be complied with and, in addition thereto, the following:

2. In transmitting or repeating a train order by telephone the names of the stations, conductors, train and engine numbers and time, should first be pronounced plainly, then spelled, letter by letter, and figures duplicated, naming each figure separately; the train dispatcher writing it in the train order book as it is being sent and underscoring it as it is being repeated.

EXAMPLE 1.

Order No. 49.

To C. & E. No. f-i-f-t-y--f-i-v-e (five five):

Extra e-l-e-v-e-n s-i-x-t-y-s-i-x (double one double six) and No. f-i-f-t-y--f-i-v-e (five five) will meet at O-s-h-k-o-s-h (Oshkosh) instead of N-e-e-n-a-h (Neenah).

EXAMPLE 2.

Order No. 5.

To C. & E. No. T-w-e-n-t-y--t-w-o (double two):

No. T-w-e-n-t-y--t-w-o (double two) will meet No. t-h-i-r-t-y-f-i-v-e (three five) at S-p-a-r-t-a (Sparta).

NOTE.—The parentheses and separations between letters, shown in examples 1 and 2, are to illustrate the transmission of orders and do not appear in a written order.

3. Each operator receiving an order should observe whether the others repeat correctly.

4. The train dispatcher's telephone circuit is to be used exclusively for handling trains; no messages or other business will be allowed upon it, except as may be directed.

5. The train dispatcher's receiver is in the circuit at all times, but those at stations are not.

6. Intermediate stations can call one another only through the train dispatcher's office.

7. The dispatcher, to call an office, will electrically ring a bell in the particular office desired. The person in charge will answer promptly, taking his receiver off hook and speaking his name and station.

8. A person desiring to communicate with the train dispatcher will remove the receiver from hook and speak his name and station.

9. Keep the mouth about one inch from transmitter and speak in a natural tone of voice.

10. Receivers should be placed on hook immediately when conversation is finished and kept there at all times except when in use.

11. Send reports of arrivals and departures of trains without awaiting response from the train dispatcher. The bell should not be rung except for important business and when the train dispatcher fails to respond in the usual manner.

12. Do not put receiver against the transmitter as it interferes with the proper working of the line.

13. The telephone should be cut off the line when the office is closed for the night and for meals or similar intervals during regular hours.

Relaying Telegraph Train Orders by Telephone.

14. To relay a train order through a telegraph station to a train at a telephone station, the train dispatcher will transmit it to the operator at the relaying point, who will transmit it by telephone to destination. The person receiving it should repeat it to the relaying point and each word and number underscored by the receiver at that point. It should then be repeated to train dispatcher, and if correct, the train dispatcher will respond "correct." After the parties addressed at destination have signed the order, the signature should be given to relaying office and from there to train dispatcher, and "O K," time, and train dispatcher's initials will be given, as per rule.

15. A train order relayed to a superior train restricting its rights or superiority, should be sent and "O K" given and acknowledgement received, before the "O K" is given to the inferior train.

16. A copy of every telephone order should be filed at the point of relaying, also at the point of destination, bearing the name of the person receiving and repeating the order. After executing the order the conductor should mail his copy to the proper official.

17. Upon the arrival of a train at a closed telephone station where a train is to be met or passed, if it is not in sight, the conductor should immediately communicate with the train dispatcher through the relaying operator, and report arrival of his train, giving his name, number of train or engine, and name of station or siding.

CHAPTER XIX.

THE STANDARD CODE OF RULES AND REGULATIONS GOVERNING THE MOVEMENT OF TRAINS.*

TRAIN RULES FOR SINGLE TRACK — TRAIN RULES FOR DOUBLE TRACK — TRAIN RULES FOR THREE AND FOUR TRACKS. DIAGRAMS OF HAND, FLAG AND LAMP SIGNALS. DIAGRAMS OF TRAIN SIGNALS.

The rules and regulations governing the movement of trains which follow are those adopted by the American Railway Association and are generally known as *The Standard Code.*

The American Railway Association, which has devised this code, is an organization composed of a large majority of the steam railway companies of the continent of America. While its actions are recommendatory and not binding upon its members, its decisions, representing as they must, the concensus of opinion of the majority of the carriers of the continent, necessarily are of great weight and become established practice. It may be said here that *The Standard Code* is almost universally observed in America. It will be noted that it is elastic enough to enable each individual

---

* Adopted April 25, 1906.

road to take care of the peculiarities that may attend its operation.

Form of order putting rules in effect.

The rules herein set forth govern the railroads operated by the .....Company. They take effect..... superseding all previous rules and instructions inconsistent therewith.

Special instructions may be issued by proper authority.

(Name) .....
(Title) .....

General Notice.

To enter or remain in the service is an assurance of willingness to obey the rules.

Obedience to the rules is essential to the safety of passengers and employes, and to the protection of property.

The service demands the faithful, intelligent and courteous discharge of duty.

To obtain promotion capacity must be shown for greater responsibility.

Employes, in accepting employment, assume its risks.*

General Rules.

A. Employes whose duties are prescribed by these rules must provide themselves with a copy.

B. Employes must be conversant with and obey the rules and special instructions. If in doubt as to their meaning they must apply to proper authority for an explanation.

C. Employes must pass the required examinations.

D. Persons employed in any service on trains are subject to the rules and special instructions.

E. Employes must render every assistance in their power in carrying out the rules and special instructions.

F. Any violation of the rules or special instructions must be reported.

G. The use of intoxicants by employes while on duty is prohibited. Their use, or the frequenting of places where they are sold, is sufficient cause for dismissal.

H. The use of tobacco by employes while on duty in or about passenger stations, or on passenger cars, is prohibited.

J. Employes on duty must wear the prescribed badge and uniform and be neat in appearance.

---

* Some railway companies add the following:
Each employe is expected and required to look after and be responsible for his own safety, as well as to exercise care to avoid injury to others.
In case of doubt adopt the safe course.
Speed must always be sacrificed for safety.

K. Persons authorized to transact business at stations or on trains must be orderly and avoid annoyance to patrons.

L. In case of danger to the Company's property employes must unite to protect it.*

Definitions.

ENGINE.—A locomotive propelled by any form of energy.

TRAIN.—An engine, or more than one engine coupled, with or without cars, displaying markers.

REGULAR TRAIN.—A train authorized by a time-table schedule.

SECTION.—One of two or more trains running on the same schedule displaying signals or for which signals are displayed.

EXTRA TRAIN.—A train not authorized by a time-table schedule. It may be designated as—

Extra—for any extra train, except work extra;

Work extra—for work train extra.

SUPERIOR TRAIN.—A train having precedence over another train.

TRAIN OF SUPERIOR RIGHT.—A train given precedence by train order.

TRAIN OF SUPERIOR CLASS.—A train given precedence by time-table.

TRAIN OF SUPERIOR DIRECTION.—A train given precedence in the direction specified in the time-table as between trains of the same class.

NOTE:—Superiority by direction is limited to single track.

TIME-TABLE.—The authority for the movement of regular train subject to the rules. It contains the classified schedules of trains with special instructions relating thereto.

SCHEDULE.—That part of a time-table which prescribes class, direction, number and movement for a regular train.

DIVISION.—That portion of a railway assigned to the supervision of a ———.†

SUBDIVISION.—A part of a division so designated on the time-table.

MAIN TRACK.—A track extending through yards and between stations upon which trains are operated by time-table or train order or the use of which is controlled by block signals.

SINGLE TRACK.—A main track upon which trains are operated in both directions.

DOUBLE TRACK.—Two main tracks upon one of which the cur-

---

* Some railway companies provide: that minors must not be employed without proper release from parents or guardians; that assignments of wages by employes are prohibited; that they will be dismissed if garnisheed; that accidents, detention of trains or any circumstances whereby an accident might occur must be promptly reported by telegraph; that every employe must keep the premises subject to his control neat and cleanly, and guard against fire.

† The blank may be filled in by each road to suit its own organization.

rent of traffic is in a specified direction and upon the other in the opposite direction.

THREE (OR MORE) TRACKS.—Three (or more) main tracks, upon any of which the current of traffic may be in either specified direction.

CURRENT OF TRAFFIC.—The movement of trains on a main track in one direction, specified by the rules.

STATION.—A place designated on the time-table by name at which a train may stop for traffic, or to enter or leave the main track, or from which fixed signals are operated.

SIDING.—A track, auxiliary to the main track for meeting or passing trains, limited to the distance between two adjoining telegraph stations.

FIXED SIGNAL.—A signal of fixed location indicating a condition affecting the movement of a train.

Note:—The definition of a fixed signal covers such signals as slow boards, stop boards, yard limits, switch, train order, block, interlocking, semaphore, disc, ball, or other means for indicating stop, caution, or proceed.

YARD.—A system of tracks within defined limits provided for the making up of trains, storing of cars and other purposes, over which movements not authorized by time-table, or by train order, may be made, subject to prescribed signals and regulations.

YARD ENGINE.—An engine assigned to yard service and working within yard limits.

PILOT.—A person assigned to a train when the engineman or conductor, or both, are not fully acquainted with the physical characteristics, or running rules of the road, or portion of the road, over which the train is to be moved.

TRAIN RULES FOR SINGLE TRACK.*

Standard Time.

1. Standard Time obtained from ———— observatory will be telegraphed to all points from designated offices at ——— m. daily.

Note to Rule 1.—In order to detect possible errors at junction points and to secure uniformity, the Committee recommends that the time be disseminated to all points at the same hour. The Committee considers it of great importance that the time be obtained from some observatory of recognized standing.

2. Watches that have been examined and certified to by a designated inspector must be used by conductors, enginemen, and ————.† The certificate in prescribed form must be renewed and filed with ——— every ———.

---

* Adopted April 25, 1906.

† The Committee recommends that in filling the blank each company add such other classes of employes as it may desire.

Form of Certificate.

CERTIFICATE OF WATCH INSPECTOR.

This is to certify that on.....19...
the watch of.....employed at.....
on the .....R
was examined by me. It is correct and reliable, and in my judgment will, with proper care, run within a variation of thirty seconds per week.

Name of maker .....
Brand .....
Number of Movement.....
Open or Hunting Case.....
Metal of Case .....
Stem or Key Winding.....

Signed,

.....
Inspector.

Address .....

3. Watches of conductors, enginemen and ———* must be compared, before starting on each trip, with a clock designated as a Standard Clock. The time when watches are compared must be registered on a prescribed form.

Note to Rule 3.—The conditions under which conductors and enginemen whose duties preclude access to a standard clock are required to obtain Standard time vary so much on different roads that the Committee recommends that each adopt such regulations to cover the case supplementary to this rule, as may best suit its own requirements.

Time Tables.

4. Each time-table, from the moment it takes effect supersedes the preceding time-table and its schedules take effect on any division (or sub-division) at the leaving time at their initial stations on such division (or sub-division). But when a schedule of the preceding time-table corresponds in number, class, day of leaving, direction, and initial and terminal stations with a schedule of the new time-table, a train authorized by the preceding time-table will retain its train orders and assume the Schedule of the corresponding number of the new time-table.

Schedules on each division (or sub-division) date from their initial stations on such division (or sub-division.)

Not more than one schedule of the same number and day shall be in effect on any division (or sub-division.)†

5. Not more than two times are given for a train at any station; where one is given, it is, unless otherwise indicated, the

---

* The Committee recommends that in filling the blank each company add such other classes of employes as it may desire.

† Some railway companies' rules provide that employes concerned in the movement of trains must provide themselves with a copy of the current time-table; must destroy all expired time-tables after comparison with the new one; and make it the duty of the chief train dispatcher to know that each conductor and engineman has a copy of the current time-table.

leaving time; where two, they are the arriving and the leaving time.

Unless otherwise indicated the time applies to the switch where an inferior train enters the siding; where there is no siding it applies to the place from which fixed signals are operated; where there is neither siding nor fixed signal it applies to the place where traffic is received or discharged.

Schedule meeting or passing stations are indicated by figures in full-faced type.

Both the arriving and leaving time of a train are in full-faced type when both are meeting or passing times, or when one or more trains are to meet or pass it between those times.

When trains are to be met or passed at a siding, extending between two adjoining stations, the time at each end of the siding will be shown in full-faced type.

Where there are one or more trains to meet or pass a train between two times, or more than one train to meet a train at any station, attention is called to it by ———.

Note to Rule 5.—The Committee recommends that each company adopt such method as it may prefer in filling the blank.

6. The following signs when placed before the figures of the schedule indicate:

"s"—regular stop:

"f"—flag stop to receive or discharge passengers or freight:

"¶"—stop for meals:

"L"—leave:

"A"—arrive:

Signal Rules.

7. Employes whose duties may require them to give signals must provide themselves with the proper appliances, keep them in good order and ready for immediate use.*

8. Flags of the prescribed color must be used by day and lamps of the prescribed color by night.

9. Night signals are to be displayed from sunset to sunrise. When weather or other conditions obscure day signals, night signals must be used in addition.

---

* Some railway companies insert here a rule to the following effect:

Signals must be used strictly in accordance with the rules, and trainmen, enginemen and all concerned must keep a constant lookout for them. Those giving signals must locate themselves so as to be plainly seen, and make them so as to be plainly understood. The utmost care must be exercised by trainmen, yardmen and enginemen to avoid taking signals that may be intended for other trains. Unless conductor and enginemen are positive that signals given are for them, they will not move their train until communication is made by words. In backing a train the disappearance from view of trainmen, or lamp by which signals are given, will be construed as a stop signal.

Visible Signals.

10. COLOR SIGNALS.

COLOR.	INDICATION.
(*a*) Red.	Stop.
(*b*) ———	Proceed, and for other uses prescribed by the rules.
(*c*) ———	Proceed with caution, and for other uses prescribed by the rules.
(*d*) Green and white.	Flag stop. See Rule 28.
(*e*) Blue.	See Rule 26.

Note to Rule 10.—The Committee has omitted giving the colors of signals (*b*) and (*c*) in Rule 10, leaving it discretionary with each road to use such colors as it may prefer.

11. A fusee on or near the track burning red must not be passed until burned out. When burning green it is a caution signal.

12. HAND, FLAG AND LAMP SIGNALS.

MANNER OF USING.	INDICATION.
(*a*) Swung across the track*	Stop.
(*b*) Raised and lowered vertically.†	Proceed.
(*c*) Swung vertically in a circle at half arm's length across the track, when the train is standing.‡	Back.
(*d*) Swung vertically in a circle at arm's length across the track, when the train is running.§	Train has parted.
(*e*) Swung horizontally above the head when the train is standing.¶	Apply air brakes.
(f) Held at arm's length above the head, when the train is standing.‖	Release air brakes.

13. Any object waved violently by any one on or near the track is a signal to stop.

---

* See diagram page 550.
† See diagram page 550.
‡ See diagram page 551.
§ See diagram page 551.
¶ See diagram page 551.
‖ See diagram page 551.

Audible Signals.

14 ENGINE WHISTLE SIGNALS.

Note.—The signals prescribed are illustrated by "o" for short sounds; "——" for longer sounds. The sound of the whistle should be distinct, with intensity and duration proportionate to the distance signal is to be conveyed.

SOUND.	INDICATION.
(*a*) o	Stop. Apply brakes.
(*b*) —— ——	Release brakes.
(*c*) —— o o o	Flagman go back and protect rear of train.
(*d*) —— —— —— ——	Flagman return from west or south.
(*e*) —— —— —— —— ——	Flagman return from east or north.
(*f*) —— —— ——	When running, train parted; to be repeated until answered by the signal prescribed by Rule 12 (*d*)* Answer to 12 (*d*).†
(*g*) o o	Answer to any signal not otherwise provided for.
(*h*) o o o	When train is standing, back. Answer to 12 (*c*)† and 16 (*c*). When train is running, answer to 16 (*d*).
(*j*) o o o o	Call for signals.
(*k*) —— o o	To call the attention of yard engines, extra trains or trains of the same or inferior class or inferior right to signals displayed for a following section.
(*l*) —— —— o o	Approaching public crossings at grade.
(*m*) —— —— ——	Approaching stations, junctions and railroad crossings at grade.

A succession of short sounds of the whistle is an alarm for persons or cattle on the track.‡

15. The explosion of one torpedo is a signal to stop; the explosion of two not more than 200 feet apart is a signal to reduce speed, and look out for a stop signal.

16. COMMUNICATING SIGNALS.

SOUND.	INDICATION.
(*a*) Two.	When a train is standing, start.
(*b*) Two.	When train is running, stop at once.
(*c*) Three.	When train is standing, back the train.
(*d*) Three.	When train is running, stop at next station.
(*e*) Four.	When train is standing, apply or release air brakes.
(*f*) Four.	When train is running, reduce speed.
(*g*) Five.	When train is standing, call in flagman.
(*h*) Five.	When train is running, increase speed.

* See diagram page 551. † See diagram page 551.

‡ Some railway companies insert here a rule to the following effect:

Should a train on single track or at end of double track fail to answer whistle signal (14*k*) as provided, the train displaying the signals will stop at once and not proceed until the signals are acknowledged, and will report the fact to the superintendent from the first open train order office.

Train Signals.

17. The head-light will be displayed to the front of every train by night, and must be concealed when a train turns out to meet another and has stopped clear of main track, or is standing to meet trains at the end of double track or at junctions.

18. Yard engines will display the head-light to the front and rear by night. When not provided with a head-light at the rear, two white lights must be displayed. Yard engines will not display markers.

19. The following signals will be displayed, one on each side of the rear of every train, as markers, to indicate the rear of the train: By day, green flags: By night, green lights to the front and side and red lights to the rear; except when the train is clear of the main track, when green lights must be displayed to the front, side and rear.*

20. All sections, except the last, will display two green flags and, in addition, two green lights by night, in the places provided for that purpose on the front of the engine.†

21. Extra trains will display two white flags and, in addition, two white lights by night, in the places provided for that purpose on the front of the engine.‡

22. When two or more engines are coupled, the leading engine only shall display the signals as prescribed by Rules 20 and 21.

23. One flag or light displayed where in Rules 19, 20 and 21 two are prescribed will indicate the same as two; but the proper display of all train signals is required.

24. When cars are pushed by an engine (except when shifting or making up trains in yards) a white light must be displayed on the front of the leading car by night.§

25. Each car on a passenger train must be connected with the engine by a communicating signal appliance.

26. A blue flag by day and a blue light by night, displayed at one or both ends of an engine, car or train, indicates that workmen are under or about it; when thus protected it must not be coupled to or moved. Workmen will display the blue signals and the same workmen are alone authorized to remove them. Other cars must not be placed on the same track so as to intercept the view of the blue signals, without first notifying the workmen.

Use of Signals.

27. A signal imperfectly displayed, or the absence of a signal at a place where a signal is usually shown, must be regarded as a stop signal, and the fact reported to the ———.

---

* See diagrams, pages 552, 553, 556, 559, 560, 561.
† See diagrams, pages 555, 556.
‡ See diagrams, pages 557, 558, 559.
§ See diagrams, pages 562, 563.

28. A combined green and white signal is to be used to stop a train only at the flag stations indicated on its schedule. When it is necessary to stop a train at a point that is not a flag station on its schedule, a red signal must be used.

29. When a signal (except a fixed signal) is given to stop a train, it must, unless otherwise provided, be acknowledged as prescribed by Rule 14 (*g*) or (*h*).

30. The engine-bell must be rung when an engine is about to move.

31. The engine-bell must be rung on approaching every public road crossing at grade, and until it is passed; and the whistle must be sounded at all whistling-posts.

32. The unnecessary use of either the whistle or the bell is prohibited. They will be used only as prescribed by rule or law, or to prevent accident.

33. Watchmen stationed at public road and street crossings must use red signals only when necessary to stop trains.

Superiority of Trains.

71. A train is superior to another train by right, class or direction.

Right is conferred by train order; class and direction by Time-table.

Right is superior to class or direction.

Direction is superior as between trains of the same class.

Note.—Superiority by direction is limited to single track.

72. Trains of the first class are superior to those of the second; trains of the second class are superior to those of the third; and so on.

Trains in the direction specified by the Time-table are superior to trains of the same class in the opposite direction.

73. Extra trains are inferior to regular trains.

Movement of Trains.

82. Time-table schedules, unless fulfilled, are in effect for twelve hours after their time at each station.

Regular trains twelve hours behind either their schedule arriving or leaving time at any station lose both right and schedule, and can thereafter proceed only as authorized by train order.

83. A train must not leave its initial station on any division (or subdivision) or a junction, or pass from double to single track, until it has been ascertained whether all trains due, which are superior, or of the same class, have arrived or left.

84. A train must not start until the proper signal is given.

85. When a train of one schedule is on the time of another schedule of the same class in the same direction, it will proceed on its own schedule.

Trains of one schedule may pass trains of another schedule of the same class, and extras may pass and run ahead of extras.

86. An inferior train must clear the time of a superior train in the same direction, not less than five minutes, but must be clear at the time a first-class train, in the same direction, is due to leave the next station in the rear where time is shown.

87. An inferior train must keep out of the way of opposing superior trains and failing to clear the main track by the time required by rule must be protected as prescribed by Rule 99.

Extra trains must clear the time of regular trains —— minutes unless otherwise provided, and will be governed by train orders with respect to opposing extra trains.

88. At meeting points between trains of the same class the *inferior* train must clear the main track before the leaving time of the *superior* train.

At meeting points between extra trains, the train in the inferior Time-table direction must take the siding unless otherwise provided.

Trains must pull into the siding when practicable; if necessary to back in, the train must first be protected, as prescribed by Rule 99, unless otherwise provided.

89. At meeting points between trains of different classes the inferior train must take the siding and clear the superior train at least five minutes and must pull into the siding, when practicable. If necessary to back in, the train must first be protected as prescribed by Rule 99, unless otherwise provided.

Note to Rules Nos. 88 and 89.—The Committee recommends, that where greater clearance is necessary Rule No. 88 should require a clearance of FIVE minutes and Rule No. 89 of TEN minutes.

90. Trains must stop at schedule meeting stations, if the train to be met is of the same class, unless the switch is right and the track clear.

When the expected train of the same class is not found at the schedule meeting station, the superior train must approach all sidings prepared to stop, until the expected train is met or passed.

Trains must stop clear of the switch used by the train to be met in going on the siding.

91. Unless some form of block signal is used, trains in the same direction must keep at least five minutes apart, except in closing up at stations.

Note to Rule 91.—The Committee recommends, that where greater clearance is necessary, Rule No. 91 should allow a clearance of TEN minutes or more.

92. A train must not arrive at a station in advance of its schedule arriving time.

A train must not leave a station in advance of its schedule leaving time.

93. Within yard limits the main track may be used, protecting against —— class trains.

—— class and extra trains must move within yard limits prepared to stop unless the main track is seen or known to be clear.

94. A train which overtakes another train so disabled that it cannot proceed will pass it, if practicable, and if necessary will assume the schedule and take the train orders of the disabled train,

proceed to the next open telegraph office, and there report to the ————. The disabled train will assume the right or schedule and take the train orders of the last train with which it has exchanged and will, when able, proceed to and report from the next open telegraph office.

When a train, unable to proceed against the right or schedule of an opposing train, is overtaken between telegraph stations by an inferior train or a train of the same class having right or schedule which permits it to proceed, the delayed train may, after proper consultation with the following train, precede it to the next telegraph station, where it must report to ———. When opposing trains are met under these circumstances, it must be fully explained to them by the leading train that the expected train is following.

95. Two or more sections may be run on the same schedule.

Each section has equal Time-table authority. A train must not display signals for a following section without orders from the ————.

96. When signals displayed for a section are taken down at any point before that section arrives, the conductor will, if there be no other provision, arrange in writing with the operator, or if there be no operator, with the switchtender, or in the absence of both, with a flagman left there for that purpose, to notify all opposing inferior trains or trains of the same class leaving such point, that the section for which the signals were displayed has not arrived.

Note to Rule 96.—The Committee recommends. If a company desires to have all opposing trains notified, that the last sentence of Rule 96 be changed to read: "to notify all opposing trains that the sections for which signals were displayed has not arrived."

97. Extra trains must not be run without orders from the———.

98. Trains must approach the end of double track, junctions, railroad crossings at grade, and drawbridges, prepared to stop, unless the switches and signals are right and the track is clear. Where required by law, trains must stop.

99. When a train stops or is delayed, under circumstances in which it may be overtaken by another train the flagman must go back immediately with stop signals a sufficient distance to insure full protection. When recalled he may return to his train, first placing two torpedoes on the rail when the conditions require it.

The front of a train must be protected in the same way, when necessary, by the ————.

100. When the flagman goes back to protect the rear of the train, the ———— must, in the case of passenger trains, and the next brakeman in the case of other trains, take his place on the train.

101. If a train should part while in motion, trainmen must, if possible, prevent damage to the detached portions. The signals prescribed by Rules 12 (*d*) and 14 (*f*) must be given.

The detached portion must not be moved or passed until the front portion comes back.

102. When cars are pushed by an engine (except when shifting and making up trains in yards) a flagman must take a conspicuous position on the front of the leading car.

103. Messages or orders respecting the movement of trains or the condition of track or bridges must be in writing.

104. Switches must be left in proper position after having been used. Conductors are responsible for the position of the switches used by them and their trainmen, except where switchtenders are stationed.

A switch must not be left open for a following train unless in charge of a trainman of such train.

105. Both conductors and enginemen are responsible for the safety of their trains and, under conditions not provided for by the rules, must take every precaution for their protection.

106. In all cases of doubt or uncertainty the safe course must be taken and no risks run.*

---

* Some railway companies add the following:

Before a switch which is protected by a distant signal manually operated by trainmen is opened for a movement from a siding to a main track, if the signal cannot be seen from the switch, the signal lever must first be placed at Caution, then at least one minute permitted to elapse to allow time for an approaching train to appear.

After resetting the switch for main track movements, the signal lever must be thrown and locked in its normal position causing the signal to indicate Proceed.

The distant semaphore switch signal is provided only as an additional safeguard and does not relieve trainmen from protecting as prescribed by rule 99.

Extra precautions must be taken in stormy or foggy weather.

Trainmen or other employes must not unlock nor stand within twenty feet of a main track switch on the approach or during the passing of any train, and when practicable will stand on the opposite side of the track from the switch lever.

When a train backs in a siding to meet or be passed by another train, the enginemen, when his engine is clear of the main track, must also see that the switch is properly set for the main track. And when entering or leaving a siding or other track, he must see that switches ahead are properly set.

If a main track switch is defective, or has a defective lock, the switch must be secured and reported at once by wire to the superintendent.

Main track switch targets will show edge of target and at night a green light when set for main track, or face of target and at night a red light when set for siding, or junction tracks.

In approaching a station where a passenger train is due or past due, and where the view is not clear, trains must be under perfect control so that they may be stopped, if necessary, before reaching the station.

All trains will reduce speed to four miles per hour when passing a passenger train receiving or discharging passengers.

When stopping to take coal or water, freight trains must stop not less than one hundred feet before reaching the coal shed water tank or stand pipe, and the engine must be detached, leaving the air brakes applied.

Conductors and enginemen must consult their respective bulletin boards before starting out, and neglect to do so will not be considered as a valid excuse for failure to comply with instruc-

SINGLE TRACK.

Rules for Movement by Train Orders.

201. For movements not provided for by Time-table, train orders will be issued by authority and over the signature of the ————————. They must contain neither information nor instructions not essential to such movements.

They must be brief and clear; in the prescribed forms when applicable; and without erasure, alteration or interlineation.

202. Each train order must be given in the same words to all persons or trains addressed.

203. Train orders will be numbered consecutively each day, beginning with No. — at midnight.

204. Train orders must be addressed to those who are to execute them, naming the place at which each is to receive his copy. Those for a train must be addressed to the conductor and engineman, and also to any one who acts as its pilot. A copy for each person addressed must be supplied by the operator.

Orders addressed to operators restricting the movement of trains must be respected by conductors and enginemen the same as if addressed to them.

205. Each train order must be written in full in a book provided for the purpose at the office of the ————————; and with it recorded the names of those who have signed for the order; the time and the signals which show when and from what offices the order was repeated and the responses transmitted; and the train dispatcher's initials. These records must be made at once, and never from memory or memoranda.

206. Regular trains will be designated in train orders by their numbers, as "No. 10," or "2d No. 10," adding engine numbers if desired. Extra trains will be designated by engine numbers, and the direction as Extra 798 "East" or "West." Other numbers and time will be stated in figures only.

207. To transmit a train order, the signal "31" or the signal "19" followed by the direction must be given to each office addressed, the number of copies being stated, if more or less than three—thus, "31 West copy 5," or "19 East copy 2."

Note to Rule 207.—Where forms "31" and "19" are not both in use, the signal may be omitted.

208 (*A*). A train order to be sent to two or more offices must be transmitted simultaneously to as many of them as practicable. The several addresses must be in the order of superiority of trains, each office taking its proper address. When not sent simultaneously to all, the order must be sent first to the superior train.

---

tions posted thereon; location of bulletin boards will be specified on the division time-tables.

Registering stations will be indicated on the division time-tables. Conductors must promptly register the time of arrival and departure of their trains at all such stations, together with additional information called for.

208 (*B*). A train order to be sent to two or more offices must be transmitted simultaneously to as many of them as practicable. The several addresses must be in the order of superiority of trains and when practicable must include the operator at the meeting or waiting point, each office taking its proper address.

When not sent simultaneously to all, the order must be sent first to the superior train.

Copies of the order addressed to the operator at the meeting or waiting point must be delivered to all trains affected until all have arrived from one direction.*

209. Operators receiving train orders must write them in manifold during transmission and if they cannot at one writing make the requisite number of copies, must trace others from one of the copies first made.

Note to Rule 209.—If the typewriter is used for copying train orders, when additional copies are made, the order must be repeated from such copies to the train dispatcher and "complete" given in the usual manner.

210. When a "31" train order has been transmitted, operators must (unless otherwise directed) repeat it at once from the manifold copy in the succession in which the several offices have been addressed and then write the time of repetition on the order. Each operator receiving the order should observe whether the others repeat correctly.

Note to Rule 210.—The blanks in the above rule may be filled for each road to suit its own requirements. On roads where the signature of the engineman is desired, the words "except enginemen," and the last sentence in the second paragraph may be omitted. If preferred, each person receiving an order may be required to read it aloud to the operator.

Those to whom the order is addressed, except enginemen, must then sign it, and the operator will send their signatures preceded by the number of the order to the ————. The response "complete," and the time, with the initials of the ———, will then be given by the train dispatcher. Each operator receiving this response will then write on each copy the word "complete," the time, and his last name in full, and then deliver a copy to each person addressed, except enginemen. The copy for each engineman must be delivered to him personally by ————.

211. When a "19" train order has been transmitted, operators must (unless otherwise directed) repeat it at once from the manifold copy, in the succession in which the several offices have been addressed. Each operator receiving the order should observe whether the others repeat correctly. When the order has been

---

* Some railway companies insert here a rule to the following effect: Meeting orders, or orders conferring rights to the point where placed, must not be addressed to the trains of superior right, at the point of execution, if it can be avoided. When it cannot be avoided, special precaution must be taken by the train dispatchers and operators to insure safety, and the following notice will be incorporated in the order; "—— gets this order at ——."

repeated correctly by an operator, the response "complete," and the time, with the initials of the ———, will be given by the train dispatcher. The operator receiving this response will then write on each copy the word "complete," the time, and his last name in full, and personally deliver a copy to each person addressed without taking his signature. But when delivery to engineman will take the operator from the immediate vicinity of his office, the engineman's copy will be delivered by ———.

When a "19" train order restricting the superiority of a train is issued for it at the point where such superiority is restricted, the train must be brought to a stop before delivery of the order.

212. A train order may, when so directed by the train dispatcher, be acknowledged without repeating, by the operator responding: "X; Number of Train Order to Train Number," with the operator's initials and office signal. The operator must then write on the order his initials and the time.*

213. "Complete" must not be given to a train order for delivery to an inferior train until the order has been repeated or the "X" response sent by the operator who receives the order for the superior train.

214. When a train order has been repeated or "X" response sent, and before "complete" has been given, the order must be treated as a holding order for the train addressed, but must not be otherwise acted on until "complete" has been given.

If the line fails before an office has repeated an order or has sent the "X" response, the order at that office is of no effect and must be there treated as if it had not been sent.

215. The operator who receives and delivers a train order must preserve the lowest copy.

216. For train orders delivered by the train dispatcher the requirements as to the record and delivery are the same as at other offices.

217. A train order to be delivered to a train at a point not a telegraph station, or at one at which the telegraph office is closed, must be addressed to

"*C. and E.* ——— (*at* ———), *care of* ———,"

and forwarded and delivered by the conductor or other person in whose care it is addressed. When form 31 is used "complete" will be given upon the signature of the person by whom the order is to be delivered, who must be supplied with copies for the conductor and engineman addressed, and a copy upon which he shall take their signatures. This copy he must deliver to the first operator accessible, who must preserve it, and at once transmit the signatures of the conductor and engineman to the train dispatcher.

---

* Some railway companies insert here a rule as follows: "X" is the operator's acknowledgment that an order has been received for a specified train, or trains, and the train order signal displayed at "stop" and, until the orders have been delivered or annulled, the signal must not be restored to proceed.

Orders so delivered must be acted on as if "complete" had been given in the usual way.

For orders which are sent, in the manner herein provided, to a train, the superiority of which is thereby restricted, "complete" must not be given to an inferior train until the signatures of the conductor and engineman of the superior train have been sent to the ———.

218. When a train is named in a train order, by its schedule number alone, all sections of that schedule are included, and each must have copies delivered to it.

219. Unless otherwise directed, an operator must not repeat or give the "X" response to a train order for a train which has been cleared or of which the engine has passed his train-order signal until he has obtained the signature of the conductor and engineman to the order.

220. Train orders once in effect continue so until fulfilled, superseded or annulled. Any part of an order specifying a particular movement may be either superseded or annulled.

Orders held by or issued for or any part of an order relating to a regular train become void when such train loses both right and schedule as prescribed by Rules 4 and 82, or is annulled.

221. (*A*). A fixed signal must be used at each train-order office which shall indicate "stop" when there is an operator on duty, except when changed to "proceed" to allow a train to pass after getting train orders, or for which there are no orders. A train must not pass the signal while "stop" is indicated. The signal must be returned to "stop" as soon as a train has passed. It must be fastened at "proceed" only when no operator is on duty.

Note to Rule 221 (*A*).—The conditions which affect trains at stations vary so much that it is recommended each road adopt such regulations supplementary to this rule as may best suit its own requirements.

Operators must have the proper appliances for hand signaling ready for immediate use if the fixed signal should fail to work properly. If a signal is not displayed at a night office, trains which have not been notified must stop and ascertain the cause, and report the facts to the ——— from the next open telegraph office.

Where the semaphore is used, the arm indicates "stop" when horizontal and "proceed" when in an inclined position.

221. (*B*.) A fixed signal must be used at each train-order office, which shall indicate "stop" when trains are to be stopped for train orders. When there are no orders the signal must indicate "proceed."

When an operator receives the signal "31," or "19," followed by the direction he must immediately display the "stop signal" for the direction indicated and then reply "stop displayed;" adding the direction and until the orders have been delivered or annulled the signal must not be restored to "proceed." While

"stop" is indicated trains must not proceed without a clearance card (Form ——— (A)).

Operators must have the proper appliances for hand signaling ready for immediate use if the fixed signal should fail to work properly. If a signal is not displayed at a night office, trains which have not been notified must stop and ascertain the cause, and report the facts to the ——— from the next open telegraph office.

Where the semaphore is used, the arm indicates "stop" when horizontal and "proceed" when in an inclined position.

Note to Rules 221 (*A*) and 221 (*B*).—The Committee has recommended two forms of Rule 221, leaving it discretionary to adopt one or both of these forms according to the circumstances of the traffic.

222. Operators will promptly record and report to the ——— the time of departure of all trains and the direction of extra trains. They will record the time of arrival of trains and report it when so directed.

223. The following signs and abbreviations may be used:

Initials for signature of the ———.
Such office and other signals as are arranged by the ———.
C & E—for Conductor and Engineman.
X—Train will be held until order is made "complete."
Com—for Complete.
O S—Train Report.
No—for Number.
Eng—for Engine.
Sec—for Section.
Psgr—for Passenger.
Frt—for Freight.
Mins—for Minutes.
Jct—for Junction.
Dispr—for Train Dispatcher.
Opr—for Operator.
31 or 19—to clear the line for Train Orders, and for Operators to ask for Train Orders.
S D—for "Stop Displayed."
The usual abbreviations for the names of the months and stations.

General Note.—Blanks in the rules may be filled by each road to suit its own organization or requirements.

SINGLE TRACK.

Forms of Train Orders.

FORM A. FIXING MEETING POINTS FOR OPPOSING TRAINS.

(1.) ——— meet ——— at ———.
(2.) ——— meet ——— at ——— ——— at ——— (and so on).

EXAMPLES.

(1) *No. 1 meet No. 2 at "B."*
No. 3 meet 2d No. 4 at "B."
No. 5 meet Extra 95 east at "B."
Extra 652 north meet Extra 231 south at "B."
(2) *No. 2 and 2d No. 4 meet Nos. 1 and 3 at "C" and Extra 95 west at "D."*
No. 1 meet No. 2 at "B" 2d No. 4 at "C" and Extra 95 east at "D."

Trains receiving these orders will run with respect to each other to the designated points and there meet in the manner provided by the Rules.

FORM B. DIRECTING A TRAIN TO PASS OR RUN AHEAD OF ANOTHER TRAIN.

(1.) ——— pass ——— at ———.
(2.) ——— pass ——— when overtaken.
(3.) ——— run ahead of ——— ——— to ———.
(4.) ——— run ahead of ——— ——— until overtaken.
(5.) ——— pass ——— at ——— and run ahead of ——— ——— to ———.

EXAMPLES.

(1.) *No. 1 pass No. 3 at "K."*
(2.) *No. 6 pass No. 4 when overtaken.*
(3.) *Extra 594 east run ahead of No. 6 "M" to "B."*
(4.) *Extra 95 west run ahead of "B" until overtaken.*
(5.) *No. 1 pass No. 3 at "K" and run ahead of No. 7 "M" to "Z."*

When under (1) a train is to pass another both trains will run according to rule to the designated point and there arrange for the rear train to pass promptly.

Under (2), both trains will run according to rule until the second-named train is overtaken and then arrange for the rear train to pass promptly.

Under (3), the second-named train must not exceed the speed of the first-named train between the points designated.

Under (4), the first-named train will run ahead of the second-named train from the designated station until overtaken, and then arrange for the rear train to pass promptly.

When an inferior train receives an order to pass a superior train, right is conferred to run ahead of the train passed from the designated point.

FORM C. GIVING RIGHT TO A TRAIN OVER AN OPPOSING TRAIN.

——— has right over ——— ——— to ———.

EXAMPLES.

(1.) *No. 1 has right over No. 2 "G" to "X."*
(2.) *Extra 37 east has right over No. 3 "F" to "A."*

This order gives right to the train first named over the other train between the points named.

If the trains meet at either of the designated points, the first-named train must take the siding, unless the order otherwise prescribes.

Under (1), if the second-named train reaches the point last named before the other arrives it may proceed, keeping clear of the opposing train as many minutes as such train was before required to clear it under the Rules.

Under (2), the regular train must not go beyond the point last named until the extra train has arrived, unless directed by train order to do so.

FORM D. GIVING REGULAR TRAINS THE RIGHT OVER A GIVEN TRAIN.

[OMITTED. NOT USED]

FORM E. TIME ORDERS.

(1.) ——— run ——— late ——— to ———.
(2.) ——— run ——— late ——— to ——— and ——— late ——— to ——— etc.
(3.) ——— wait at ——— until ——— for ———.
(4.) ——— wait at ——— until ———.
——— until ———.
——— until ———.

EXAMPLES.

(1.) *No. 1 run 20 min late "A" to "G."*
(2.) *No. 1 run 20 min late "A" to "G" and 15 min late "G" to "K," etc.*
(3.) *No. 1 wait at "H" until 10 a m for No. 2.*
(4.) *Nos. 1 and 3 wait at "N" until 10 a m.*
"P" until 10:30 a m.
"R" until 10:55 a m etc.

(1) and (2) make the schedule time of the train named, between the stations mentioned, as much later as stated in the order, and any other train receiving the order is required to run with respect to this later time, as before required to run with respect to the regular schedule time. The time in the order should be such as can be easily added to the schedule time.

Under (3) the train first named must not pass the designated point before the time given, unless the other train has arrived. The train last named is required to run with respect to the time specified at the designated point or any intermediate station where scheduled time is earlier than the time specified in the order, as before required to run with respect to the schedule time of the train first named.

Under (4), the train (or trains) named must not pass the designated points before the times given.

Other trains receiving the order are required to run with respect to the time specified at the designated points or any intermediate station where schedule time is earlier than the time specified in the order as before required to run with respect to the schedule time of the train (or trains) named.

All of these examples may be used in connection with an extra train created by example (3) of Form G and the times at each point stated in that example have the same meaning as schedule times in the foregoing examples.

FORM F. FOR SECTIONS.

(1.) ——— display signals and run as ——— ——— to ———.
(2.) ——— run as ——— ——— to ———.
(3.) ——— display signals ——— to ——— for ———.
(6.) ——— is withdrawn as ——— at ———.
(7.) ——— instead of ——— display signals and run as ——— ——— to ———.
(8.) ——— take down signals at ———.
(9.) ——— and ——— reverse positions as ——— and ——— ——— to ———.

EXAMPLES.

(*1.*) *Eng 20 display signals and run as 1st No. 1 "A" to "Z."*
(*2.*) *Eng 25 run as 2d No. 1 "A" to "Z."*
(*3.*) *No. 1 display signals "A" to "G" for Eng 65.*
2d No. 1 display signals "B" to "E" for Eng 99.

These examples may be modified as follows:

(*4.*) *Engs 20, 25 and 99 run as 1st, 2d and 3d No. 1 "A" to "Z."*

Example (1) is to be used when the number of the engine for which signals are displayed is unknown and is to be followed by example (2), both being single order examples.

Under examples (2) and (3) the engine named will not display signals.

Under example (4) the engine last named will not display signals.

For changing sections:

To add an intermediate section the following modification of example (1) will be used:

(5.) Eng 85 display signals and run as 2d No. 1 "N" to "Z." Following sections change numbers accordingly.

Under (5) Engine 85 will display signals and run as directed and following sections will take the next higher number.

To drop an intermediate section the following example will be used:

(6.) Eng 85 is withdrawn as 2d No. 1 at "H." Following sections change numbers accordingly.

Under (6) Engine 85 will drop out at "H" and following sections will take the next lower number.

To substitute one engine for another on a section, the following will be used:

(7.) Eng 18 instead of Eng 85 display signals and run as 2d No. 1 "R" to "Z."

Under (7) Engine 85 will drop out at "R" and Engine 18 will run as directed.

If Engine 85 is last section the words "display signals and" will be omitted. Following sections need not be addressed.

To discontinue the display of signals the following example will be used:

(8.) 2d No. 1 take down signals at "D."

Under example (8) 2d No. 1 will take down signals as directed and a following section must not proceed beyond the point named.

To pass one section by another, the following will be used:

(9.) Engs 99 and 25 reverse positions as 2d and 3d No. 1 "H" to "Z."

Under (9) Engine 99 will run ahead of Engine 25 "H" to "Z," and, if necessary, both engines will arrange signals accordingly. Following sections, if any, need not be addressed.

The character of a train for which signals are displayed may be stated. Each section affected by the order must have copies, and must arrange signals accordingly.

To annul a section for which signals have been displayed over a division or any part thereof, when no train is to follow the signals, Form K must be used.

Form G. Extra Trains.

(1.) Eng ——— run extra ——— to ———.

(2.) Eng ——— run extra ——— to ——— and return to ———.

EXAMPLES.

(1.) *Eng 99 run extra "A" to "F."*

(2.) *Eng 99 run extra "A" to "F" and return to "C."*

Under (2) the extra must go to "F" before returning to "C."

(3.) Eng ——— run extra leaving ——— on ——— as follows with right over all trains.

Leave ———.

" ———.

Arrive ———.

EXAMPLE.

(3.) *Eng 77 run extra leaving "A" on Thursday, Feb. 17th as follows with right over all trains.*

Leave "A" 11 30 p m

" "C" 12 25 a m

" "F" 1 47 a m

Arrive "F" 2 22 a m

This order may be varied by specifying the kind of extra and the particular trains over which the extra shall or shall not have right. Trains over which the extra is thus given right must clear the time of the extra ——— minutes.

FORM H. WORK EXTRA.

(1.) ——— works ——— until ——— between ——— and ———

EXAMPLES.

(1.) Eng 292 works 7 a m to 6 p m between "D" and "E."

Under (1), the work extra must, whether standing or moving, protect itself against extras within the working limits in both directions as prescribed by rule. The time of regular trains must be cleared.

This may be modified by adding:

(2.) Not protecting against (eastward) extras.

(3.) Not protecting against extras.

Under (2) the work extra will protect only against westward extras. The time of regular trains must be cleared.

Under (3) protection against extras is not required. The time of regular trains must be cleared.

When a work extra has been instructed by order to not protect against extra trains, and, afterwards, it is desired to have it clear the track for (or protect itself after a certain hour against) a designated extra, an order may be given in the following form:

(4.) Work Extra 292 clears (or protects against) extra 76 east between "D" and "E" after 2 10 p. m.

Under (4), extra 76 east must not enter the working limits before 2:10 p. m., and will then run expecting to find the work extra clear of the main track (or protecting itself) as the order may require.

To enable a work extra to work upon the time of a regular train, the following form will be used:

(5.) Work Extra 292 protects against No. 55 (or ——— class trains) between "D" and "E."

Under (5), the work extra may work upon the time of the train or trains mentioned in the order, and must protect itself against such train or trains, as prescribed by Rule 99. The regular train or trains receiving the order will run expecting to find the work extra protecting itself.

When a work extra is to be given exclusive right over all trains the following form will be used:

(6.) Work extra 292 has right over all trains between "D" and "E" 7 p. m. to 12 night.

This gives the work extra the exclusive right between the points designated between the times named.

Work extras must give way to all trains as promptly as practicable.

Whenever extra trains are run over working limits, they must be given a copy of the order sent to the work extra. Should the working order instruct a work extra to not protect against extra trains in one or both directions, extra trains must protect, as prescribed by Rule 99, against the work extra; if the order indicates

that the work extra is protecting itself against other trains, they will run expecting to find the work extra protecting itself.

The working limits should be as short as practicable, to be changed as the progress of the work may require.

Form J. Holding Order.

Hold ———.

EXAMPLES.

Hold No. 2.

Hold all (or ——— ward) trains.

When a train has been so held it must not proceed until the order to hold is annulled, or an order given to the operator in the form:

"——— *may go.*"

These orders will be addressed to the operator and acknowledged in the usual manner and will be delivered to conductors and enginemen of all trains affected.

Form J will only be used when necessary to hold trains until orders can be given, or in case of emergency.

Form K. Annulling a Schedule or a Section.

——— of ——— is annulled ——— to ———

EXAMPLES.

No. 1 of Feb 29th is annulled "A" to "Z."

2d No. 5 of Feb 29th is annulled "E" to "G."

The schedule or section annulled becomes void between the points named and cannot be restored.

Form L. Annulling an Order.

"Order No. ——— is annulled."

EXAMPLE.

Order No. 10 is annulled.

If an order which is to be annulled has not been delivered to a train, the annulling order will be addressed to the operator, who will destroy all copies of the order annulled but his own, and write on that:

Annulled by Order No. ———.

An order which has been annulled must not be reissued under its original number.

Form M. Annulling Part of an Order.

That part of Order No. ——— reading ——— is annulled.

EXAMPLE.

That part of Order No. 10 reading No. 1 meet No. 2 at "S" is annulled.

FORM P. SUPERSEDING AN ORDER OR A PART OF AN ORDER.

This order will be given by adding to prescribed forms, the words "instead of ———."

(1.) ——— meet ——— at ——— instead of ———.

(2.) ——— has right over ——— ——— to ———instead of ———.

(3.) ——— display signals for ——— ——— to ——— instead of ———.

EXAMPLES.

(1.) No. 1 meet No. 2 at "C" instead of "B."

(2.) No. 1 has right over No. 2 "G" to "R" instead of "X."

(3.) ——— display signals for ——— ——— to ——— instead *"G."*

An order which has been superseded must not be reissued under its original number.

TRAIN RULES FOR DOUBLE TRACK.*

NOTE.—In the Code of Train Rules for Double Track, those marked "D," such as Rule D-5, Rule D-17, etc., either differ in language from the corresponding rules (Rule 5, Rule 17, etc.) of the Rules for Single Track; or are rules used only for Double Track, as Rule D-151, etc. Rules having simple numbers such as Rule 1, Rule 2, etc., are the same in both the Single and Double Track Codes.

Standard Time.

1. Standard Time obtained from ——— observatory will be telegraphed to all points from designated offices at ———, ———m. daily.

Note to Rule 1.—In order to detect possible errors at junction points and to secure uniformity, the Committee recommends that the time be disseminated to all points at the same hour. The Committee considers it of great importance that the time be obtained from some observatory of recognized standing.

2. Watches that have been examined and certified to by a designated inspector must be used by conductors, enginemen and ———.† The certificate in prescribed form must be renewed and filed with ——— every ———.

Form of Certificate.

CERTIFICATE OF WATCH INSPECTOR.

This is to certify that on.....19.....
the watch of.....
employed as.....
on the.....R.....
was examined by me. It is correct and reliable, and in my judg-

---

* Adopted April 25, 1906.

† The Committee recommends that in filling the blank each company add such other classes of employes as it may desire.

ment will, with proper care run within a variation of thirty seconds per week.

Name of Maker.....
Brand .....
Number of Movement.....
Open or hunting case.....
Metal of case.....
Stem or key winding.....

Signed,

.....
Inspector.

Address .....

3. Watches of conductors, enginemen and ———* must be compared, before starting on each trip, with a clock designated as a Standard Clock. The time when watches are compared must be registered on a prescribed form.

Note to Rule 3.—The conditions under which conductors and enginemen whose duties preclude access to a standard clock are required to obtain standard time, vary so much on different roads that the Committee recommends that each adopt such regulations to cover the case supplementary to this rule, as may best suit its own requirements.

Time-Tables.

4. Each Time-table, from the moment it takes effect, supersedes the preceding Time-table, and its schedules take effect on any division (or sub-division) at the leaving time at their initial stations on such division (or sub-division). But when a schedule of the preceding Time-table corresponds in number, class, day of leaving, direction, and initial and terminal stations with a schedule of the new Time-table, a train authorized by the preceding Time-table will retain its train orders and assume the schedule of the corresponding number of the new Time-table.

Schedules on each division (or sub-division) date from their initial stations on such division (or sub-division).

Not more than one schedule of the same number and day shall be in effect on any division (or sub-division).

D-5. Not more than two times are given for a train at any station; where one is given, it is, unless otherwise indicated, the leaving time; where two, they are the arriving and the leaving time.

Unless otherwise indicated, the time applies to the switch where an inferior train enters the siding; where there is no siding it applies to the place from which fixed signals are operated; where there is neither siding nor fixed signal, it applies to the place where traffic is received or discharged.

---

* The Committee recommends, that in filling the blank each company add such other classes of employes as it may desire.

Schedule passing stations are indicated by figures in full-faced type.

Both the arriving and leaving time of a train are in full-faced type when both are passing times, or when one or more trains are to pass it between those times.

When trains are to be passed at a siding, extending between two adjoining stations, the time at each end of the siding will be shown in full-faced type.

When there are one or more trains to pass a train between two times, attention is called to it by ———.

Note to Rule *D-5*.—The Committee recommends that each company adopt such method as it may prefer in filling the blank.

6. The following signs when placed before the figures of the schedule indicate:

"s."—regular stop:
"f"—flag stop to receive or discharge passengers or freight:
"¶"—stop for meals:
"L"—leave:
"A"—arrive.

Signal Rules.

7. Employes whose duties may require them to give signals, must provide themselves with the proper appliances, keep them in good order and ready for immediate use.

8. Flags of the prescribed color must be used by day, and lamps of the prescribed color by night.

9. Night signals are to be displayed from sunset to sunrise. When weather or other conditions obscure day signals, night signals must be used in addition.

Visible Signals.

10. COLOR SIGNALS.

COLOR.	INDICATION.
(*a*) Red.	Stop.
(*b*) ———	Proceed, and for other uses prescribed by the Rules.
(*c*) ———	Proceed with caution, and for other uses prescribed by the Rules.
(*d*) Green and White.	Flag stop. See Rule 28.
(*e*) Blue.	See Rule 26.

Note to Rule 10.—The Committee has omitted giving the colors of signals (*b*) and (*c*) in Rule 10, leaving it discretionary with each road to use such colors as it may prefer.

11. A fusee on or near the track burning red must not be passed until burned out. When burning green it is a caution signal.

12. HAND, FLAG AND LAMP SIGNALS.

MANNER OF USING.	INDICATION.
(*a*) Swung across the track.*	Stop.
(*b*) Raised and lowered vertically.†	Proceed.
(*c*) Swung vertically in a circle at half arm's length across the track, when the train is standing.‡	Back.
(*d*) Swung vertically in a circle at arm's length across the track, when the train is running.§	Train has parted.
(*e*) Swung horizontally above the head in a circle, when the train is standing.¶	Apply air brakes.
(*f*) Held at arm's length above the head, when the train is standing.‖	Release air brakes.

13. Any object waved violently by anyone on or near the track is a signal to stop.

Audible Signals.

D-14. ENGINE WHISTLE SIGNALS.

Note.—The signals prescribed are illustrated by "o" for short sounds; "——" for longer sounds. The sound of the whistle should be distinct, with intensity and duration proportionate to the distance signal is to be conveyed.

SOUND.	INDICATION.
(*a*) o	Stop. Apply brakes.
(*b*) —— ——	Release brakes.
(*c*) —— o o o	Flagman go back and protect rear of train.
(*d*) —— —— —— ——	Flagman return from west or south.
(*e*) —— —— —— —— ——	Flagman return from east or north.
(*f*) —— —— ——	When running, train parted, to be repeated until answered by the signal prescribed by Rule 12 (*d*).** Answer to 12 (*d*).**
(*g*) o o	Answer to any signal not otherwise provided for.
(*h*) o o o	When train is standing, back. Answer to 12 (*c*)†† and 16 (*c*). When train is running, answer to 16 (*d*).
(*j*) o o o o	Call for signals.
(*k*) —— o o	To call the attention of yard engines or of trains moving in the same direction to signals displayed for a following section.
(*l*) —— —— o o	Approaching public crossings at grade.
(*m*) ——————	Approaching stations, junctions and railroad crossings at grade.

* See diagram, page 550.
† See diagram, page 550.
‡ See diagram, page 551.
§ See diagram, page 551.
¶ See diagram, page 551.
‖ See diagram, page 551.
** See diagram, page 551.
†† See diagram, page 551.

A succession of short sounds of the whistle is an alarm for persons or cattle on the track.

15. The explosion of one torpedo is a signal to stop; the explosion of two not more than 200 feet apart is a signal to reduce speed, and look out for a stop signal.

16. COMMUNICATING SIGNALS.

SOUND.	INDICATION.
(*a*) Two.	When train is standing, start.
(*b*) Two.	When train is running, stop at once.
(*c*) Three.	When train is standing, back the train.
(*d*) Three	When train is running, stop at next station.
(*e*) Four.	When train is standing, apply or release air brakes.
(*f*) Four.	When train is running, reduce speed.
(*g*) Five.	When train is standing, call in flagman.
(*h*) Five.	When train is running, increase speed.

Train Signals.

D-17. The head-light will be displayed to the front of every train by night, but must be concealed when a train is standing to meet trains at the end of double track or at junctions.

18. Yard engines will display the head-light to the front and rear by night. When not provided with a head-light at the rear, two white lights must be displayed. Yard engines will not display markers.

D-19. The following signals will be displayed, one on each side of the rear of every train, as markers, to indicate the rear of the train: By day, green flags: By night, green lights to the front and side and red lights to the rear, except when the train is clear of the main track, when green lights must be displayed to the front, side and rear,* and except when a train is turned out against the current of traffic, when green lights must be displayed to the front and side, and to the rear, a green light toward the inside and a red light to the opposite side.

20. All sections except the last will display two green flags and, in addition, two green lights by night, in the places provided for that purpose on the front of the engine.†

21. Extra trains will display two white flags and, in addition,

---

* See diagrams, pages 552, 553, 554, 560, 561.

† See diagrams, pages 555, 556.

two white lights by night, in the places provided for that purpose on the front of the engine.*

22. When two or more engines are coupled, the leading engine only shall display the signals as prescribed by Rules 20 and 21.

23. One flag or light displayed where in Rules 19, 20 and 21. two are prescribed will indicate the same as two; but the proper display of all train signals is required.

24. When cars are pushed by an engine (except when shifting or making up trains in yards) a white light must be displayed on the front of the leading car by night.†

25. Each car on a passenger train must be connected with the engine by a communicating signal appliance.

26. A blue flag by day and a blue light by night, displayed at one or both ends of an engine, car or train, indicates that workmen are under or about it; when thus protected it must not be coupled to or moved. Workmen will display the blue signals and the same workmen are alone authorized to remove them. Other cars must not be placed on the same track so as to intercept the view of the blue signals, without first notifying the workmen.

Use of Signals.

27. A signal imperfectly displayed, or the absence of a signal at a place where a signal is usually shown, must be regarded as a stop signal, and the fact reported to the ———.

28. A combined green and white signal is to be used to stop a train only at the flag stations indicated on its schedule. When it is necessary to stop a train at a point that is not a flag station on its schedule, a red signal must be used.

29. When a signal (except a fixed signal) is given to stop a train, it must, unless otherwise provided, be acknowledged as prescribed by Rule *D*-14 (*g*) or (*h*).

30. The engine-bell must be rung when an engine is about to move.

31. The engine-bell must be rung on approaching every public road crossing at grade, and until it is passed; and the whistle must be sounded at all whistling-posts.

32. The unnecessary use of either the whistle or the bell is prohibited. They will be used only as prescribed by rule or law, or to prevent accident.

33. Watchmen stationed at public road and street crossings must use red signals only when necessary to stop trains.

Superiority of Trains.

D-71. A train is superior to another train by right or class. Right is conferred by train order; class by Time-table. Right is superior to class.

---

* See diagrams, pages 557, 558, 559.
† See diagrams, pages 562, 563.

D-72. Trains of the first class are superior to those of the second; trains of the second class are superior to those of the third; and so on.

73. Extra trains are inferior to regular trains.

Movement of Trains.

82. Time-table schedules, unless fulfilled, are in effect for twelve hours after their time at each station.

Regular trains twelve hours behind their schedule arriving or leaving time at any station lose both right and schedule, and can thereafter proceed only as authorized by train order.

D-83. A train must not leave its initial station on any division (or sub-division), or a junction, until it has been ascertained whether all superior trains due have left.

84. A train must not start until the proper signal is given.

D-85. When a train of one schedule is on the time of another schedule of the same class it will proceed on its own schedule.

Trains of one schedule may pass trains of another schedule of the same class.

A section may pass and run ahead of another section of the same schedule, first exchanging orders, signals and numbers with the section to be passed. Extras may pass and run ahead of extras.

D-86. An inferior train must clear the time of a superior train not less than five minutes; but must be clear at the time a first class train in the same direction is due to leave the next station in the rear where time is shown.

Extra trains must clear the time of regular trains ——— minutes unless otherwise provided.

88. Omitted. (Not applicable to Double Track.)

89. Omitted. (Not applicable to Double Track.)

90. Omitted. (Not applicable to Double Track.)

D-91. Unless some form of block signals is used, trains must keep at least five minutes apart, except in closing up at stations.

Note to Rule *D-91.*—The Committee recommends, that where greater clearance is necessary, Rule *D*-91 should allow a clearance of TEN minutes or more.

92. A train must not arrive at a station in advance of its schedule arriving time.

A train must not leave a station in advance of its schedule leaving time.

D-93. Within yard limits the main tracks may be used, protecting against ——— class trains.

——— class and extra trains must move within yard limits prepared to stop unless the main track is seen or known to be clear.

D-94. A train which overtakes a superior train, so disabled that it cannot proceed will pass it, if practicable, and, if necessary, will assume the schedule and take the train orders of the disabled train, proceed to the next open telegraph office and there report to the ———. The disabled train will assume the schedule and

take the train orders of the last train with which it has exchanged and will, when able, proceed to and report from the next open telegraph office.

D-95. Two or more sections may be run on the same schedule.

Each section has equal Time-table authority. A train must not display signals for a following section except as prescribed by Rule 85 without orders from the ———.

96. Omitted. (Not applicable to Double Track.)

D-97. Extra trains must not be run without orders from the ———.

Work extras must move with the current of traffic unless otherwise directed.

98. Trains must approach the end of double track, junctions, railroad crossings at grade, and drawbridges, prepared to stop, unless the switches and signals are right and the track is clear. Where required by law, trains must stop.

99. When a train stops or is delayed, under circumstances in which it may be overtaken by another train, the flagman must go back immediately with stop signals a sufficient distance to insure full protection. When recalled he may return to his train, first placing two torpedoes on the rail when the conditions require it.

The front of a train must be protected in the same way, when necessary, by the ———.

100. When the flagman goes back to protect the rear of the train, the ——— must, in the case of passenger trains, and the next brakeman in the case of other trains, take his place on the train.

D 101. If a train should part while in motion, trainmen must, if possible, prevent damage to the detached portions. The signals prescribed by Rules 12 (*d*) and 14 (*f*) must be given.

The detached portion must not be moved or passed until the front portion comes back.

The engineman and trainmen of the front portion must give the train-parted signal to trains running on the opposite track. A train receiving this signal or being otherwise notified that a train on the opposite track has parted, must immediately reduce speed and proceed with caution until the separated train is passed.

When a train is disabled so it may obstruct the opposite track, trains on that track must be stopped.

102. When cars are pushed by an engine (except when shifting and making up trains in yards) a flagman must take a conspicuous position on the front of the leading car.

103. Messages or orders respecting the movement of trains or the condition of track or bridges must be in writing.

104. Switches must be left in proper position after having been used. Conductors are responsible for the position of the switches used by them and their trainmen, except where switchtenders are stationed.

A switch must not be left open for a following train unless in charge of a trainman of such train.

105. Both conductors and enginemen are responsible for the safety of their trains and under conditions not provided for by the rules, must take every precaution for their protection.

106. In all cases of doubt or uncertainty the safe course must be taken and no risks run.

D-151. Trains must keep to the ———, unless otherwise provided.

D-152. When a train crosses over to, or obstructs the other track, unless otherwise provided, it must first be protected as prescribed by Rule 99 in both directions on that track.

D-153. Trains must use caution in passing a train receiving or discharging passengers at a station and must not pass between it and the platform at which the passengers are being received or discharged.

DOUBLE TRACK.

Rules for Movement by Train Orders.

201. For movements not provided for by Time-table, train orders will be issued by authority and over the signature of the ———. They must contain neither information nor instructions not essential to such movements.

They must be brief and clear; in the prescribed forms when applicable; and without erasure, alteration or interlineation.

202. Each train order must be given in the same words to all persons or trains addressed.

203. Train orders will be numbered consecutively each day, beginning with No. —— at midnight.

204. Train orders must be addressed to those who are to execute them, naming the place at which each is to receive his copy. Those for a train must be addressed to the conductor and engineman and also to anyone who acts as its pilot. A copy for each person addressed must be supplied by the operator.

Orders addressed to operators restricting the movement of trains must be respected by conductors and enginemen the same as if addressed to them.

205. Each train order must be written in full in a book provided for the purpose at the office of the ———; and with it recorded the names of those who have signed for the order; the time and the signals which show when and from what offices the order was repeated and the responses transmitted; and the train dispatcher's initials. These records must be made at once, and never from memory or memoranda.

206. Regular trains will be designated in train orders by their numbers, as "No. 10," or "2d No. 10," adding engine numbers if desired. Extra trains will be designated by engine numbers.

and the direction as "Extra 798, 'East' or 'West.'" Other numbers and time will be stated in figures only.

207. To transmit a train order, the signal "31" or the signal "19" followed by the direction must be given to each office addressed, the number of copies being stated, if more or less than three—thus, "31 West copy 5," or "19 East copy 2."

Note to Rule 207.—Where forms "31" and "19" are not both in use, the signal may be omitted.

D-208. A train order to be sent to two or more offices must be transmitted simultaneously to as many of them as practicable. The several addresses must be in the order of superiority of trains, each office taking its proper address. When not sent simultaneously to all, the order must be sent first to the superior train.

209. Operators receiving train orders must write them in manifold during transmission and if they cannot at one writing make the requisite number of copies, must trace others from one of the copies first made.

Note to Rule 209—If the typewriter is used for copying train orders, when additional copies are made, the order must be repeated from such copies, to the train dispatcher and "complete" given in the usual manner.

210. When a "31" train order has been transmitted, operators must (unless otherwise directed) repeat it at once from the manifold copy in the succession in which the several offices have been addressed and then write the time of repetition on the order. Each operator receiving the order should observe whether the others repeat correctly.

Those to whom the order is addressed, except enginemen, must then sign it and the operator will send their signatures preceded by the number of the order to the ———. The response "complete," and the time, with the initials of the ———, will then be given by the train dispatcher. Each operator receiving this response will then write on each copy the word "complete," the time and his last name in full, and then deliver a copy to each person addressed, except enginemen. The copy for each engineman must be delivered to him personally by ———.

Note to Rule 210.—The blanks in the above rule may be filled for each road to suit its own requirements. On roads where the signature of the engineman is desired, the words "except enginemen," and the last sentence in the second paragraph may be omitted. If preferred, each person receiving an order may be required to read it aloud to the operator.

211. When a "19" train order has been transmitted, operators must (unless otherwise directed) repeat it at once from the manifold copy, in the succession in which the several offices have been addressed. Each operator receiving the order should observe whether the others repeat correctly. When the order has been repeated correctly by an operator, the response "complete," and the time, with the initials of the ———, will be given by the train dispatcher. The operator receiving this response will then write on each copy the word "complete," the time, and his last name in full, and personally deliver a copy to each person addressed without

taking his signature. But when delivery to engineman will take the operator from the immediate vicinity of his office, the engineman's copy will be delivered by ———.

When a "19" train order restricting the superiority of a train is issued for it at the point where such superiority is restricted, the train must be brought to a stop before delivery of the order.

212. A train order may, when so directed by the train dispatcher, be acknowledged without repeating, by the operator responding: "X; Number of Train Order to Train Number," with the operator's initials and office signal. The operator must then write on the order his initials and the time.

213. "Complete" must not be given to a train order for delivery to an inferior train until the order has been repeated or the "X" response sent by the operator who receives the order for the superior train.

214. When a train order has been repeated or "X" response sent, and before "complete" has been given, the order must be treated as a holding order for the train addressed, but must not be otherwise acted on until "complete" has been given.

If the line fails before an office has repeated an order or has sent the "X" response, the order at that office is of no effect and must be there treated as if it had not been sent.

215. The operator who receives and delivers a train order must preserve the lowest copy.

216. For train orders delivered by the train dispatcher the requirements as to the record and delivery are the same as at other offices.

217. A train order to be delivered to a train at a point not a telegraph station, or at one at which the telegraph office is closed, must be addressed to

"*C. and E.* ——— (*at* ———), *care of* ———,"

and forwarded and delivered by the conductor or other person in whose care it is addressed. When form 31 is used "complete" will be given upon the signature of the person by whom the order is to be delivered, who must be supplied with copies for the conductor and engineman addressed, and a copy upon which he shall take their signatures. This copy he must deliver to the first operator accessible who must preserve it, and at once transmit the signatures of the conductor and engineman to the train dispatcher.

Orders so delivered must be acted on as if "complete" had been given in the usual way.

For orders which are sent, in the manner herein provided, to a train, the superiority of which is thereby restricted, "complete" must not be given to an inferior train until the signatures of the conductor and engineman of the superior train have been sent to the ———.

218. When a train is named in a train order by its schedule number alone, all sections of that schedule are included, and each must have copies delivered to it.

219. Unless otherwise directed, an operator must not repeat or give the "X" response to a train order for a train which has been cleared or of which the engine has passed his train-order signal, until he has obtained the signatures of the conductor and engineman to the order.

220. Train orders once in effect continue so until fulfilled, superseded or annulled. Any part of an order specifying a particular movement may be either superseded or annulled.

Orders held by or issued for or any part of an order relating to a regular train becomes void when such train loses both right and schedule as prescribed by Rules 4 and 82, or is annulled.

221. (A). A fixed signal must be used at each train-order office, which shall indicate "stop" when there is an operator on duty, except when changed to "proceed" to allow a train to pass after getting train orders, or for which there are no orders. A train must not pass the signal while "stop" is indicated. The signal must be returned to "stop" as soon as a train has passed. It must be fastened at "proceed" only when no operator is on duty.

Operators must have the proper appliances for hand signaling ready for immediate use if the fixed signal should fail to work properly. If a signal is not displayed at a night office, trains which have not been notified must stop and ascertain the cause, and report the facts to the ——— from the next open telegraph office.

Where the semaphore is used, the arm indicates "stop" when horizontal and "proceed" when in an inclined position.

Note to Rule 221 (A).—The conditions which affect trains at stations vary so much that it is recommended each road adopt such regulations supplementary to this rule as may best suit its own requirements.

221 (B). A fixed signal must be used at each train-order office, which shall indicate "stop" when trains are to be stopped for train orders. When there are no orders the signal must indicate "proceed."

When an operator receives the signal "31" or "19," followed by the direction, he must immediately display the "stop signal" for the direction indicated and then reply "stop displayed," adding the direction, and until the orders have been delivered or annulled the signal must not be restored to "proceed." While "stop" is indicated trains must not proceed without a clearance card (Form ——— (A)).

Operators must have the proper appliances for hand signaling ready for immediate use if the fixed signal should fail to work properly. If a signal is not displayed at a night office, trains which have not been notified must stop and ascertain the cause,

and report the facts to the ——— from the next open telegraph office.

Where the semaphore is used, the arm indicates "stop" when horizontal and "proceed" when in an inclined position.

Note to Rules 221 (A) and 221 (B).—The Committee has recommended two forms of Rule 221, leaving it discretionary to adopt one or both of these forms according to the circumstances of the traffic.

222. Operators will promptly record and report to the ——— time of departure of all trains and the direction of extra trains. They will record the time of arrival of trains and report it when so directed.

223. The fcllowing signs and abbreviations may be used:

Initials for signature of the ———.
Such office and other signals as are arranged by the ———.
C & E—for Conductor and Engineman.
X—Train will be held until order is made "complete."
Com—for Complete.
O S—Train Report.
No—for Number.
Eng—for Engine.
Sec—for Section.
Psgr—for Passenger.
Frt—for Freight.
Mins—for Minutes.
Jct—for Junction.
Dispr—for Train Dispatcher.
Opr—for Operator.
31 or 19—to clear the line for Train Orders, and for operators to ask for Train Orders.
S D—for "Stop Displayed."
The usual abbreviations for the names of the months and stations.

General Note.—Blanks in the rules may be filled by each road to suit its own organization or requirements.

Double Track Forms of Train Orders.

NOTE.—In the Code of Double Track Forms of Train Orders those marked "D," such as D-Form E. D-Form G, etc., either differ in language from the corresponding Forms (Form E, Form G, etc.) of the Forms of Train Orders for Single Track; or are Forms used only for Double Track, as D-Form R, etc. Forms having simple letters, such as Form B, Form F, etc., are the same in both Single and Double Track Codes.

FORM A. FIXING MEETING POINTS FOR OPPOSING TRAINS.

Omitted. (Not applicable to Double Track.)

FORM B. DIRECTING A TRAIN TO PASS OR RUN AHEAD OF ANOTHER TRAIN.

(1.) ——— pass ——— at ———.
(2.) ——— pass ——— when overtaken.

(3.) ——— run ahead of ——— ——— to ———.
(4.) ——— run ahead of ——— ——— until overtaken.
(5.) ——— pass ——— at ——— and run ahead of ——— ——— to ———.

EXAMPLES.

(1.) No. 1 pass No. 3 at "K."
(2.) No. 6 pass No. 4 when overtaken.
(3.) Extra 594 east run ahead of No. 6 "M" to "B."
(4.) Extra 95 west run ahead of No. 3 "B" until overtaken.
(5.) No. 1 pass No. 3 at "K" and run ahead of No. 7 "M" to "Z."

When under (1) a train is to pass another both trains will run according to rule to the designated point and there arrange for the rear train to pass promptly.

Under (2), both trains will run according to rule until the second-named train is overtaken and then arrange for the rear train to pass promptly.

Under (3), the second-named train must not exceed the speed of the first-named train between the points designated.

Under (4), the first-named train will run ahead of the second-named train from the designated station until overtaken, and then arrange for the rear train to pass promptly.

When an inferior train receives an order to pass a superior train, right is conferred to run ahead of the train passed from the designated point.

FORM C. GIVING A TRAIN THE RIGHT OVER AN OPPOSING TRAIN.

Omitted. (Not applicable to Double Track.)

FORM D. GIVING REGULAR TRAINS THE RIGHT OVER A GIVEN TRAIN.

Omitted. (Not used.)

D-FORM E. TIME ORDERS.

(1.) ——— run ——— late ——— to ———.
(2.) ——— run ——— late ——— to ——— and ——— late ——— to ———, etc.
(3.) ——— wait at ——— until ———.
——— until ———.
——— until ———.

EXAMPLES.

(1.) No. 1 run 20 min. late "A" to "G."
(2.) No. 1 run 20 min. late "A" to "G" and 15 min. late "G" to "K," etc.

(*3.*) *Nos. 1 and 3 wait at "N" until 10 00 a. m.*
"P" until 10 30 a. m.
"R" until 10 55 a. m., etc.

(1) and (2) make the schedule time of the train named, between the stations mentioned, as much later as stated in the order, and any other train receiving the order is required to run with respect to this later time, as before required to run with respect to the regular schedule time. The time in the order should be such as can be easily added to the schedule time.

Under (3), the train (or trains) named must not pass the designated points before the times given.

Other trains receiving the order are required to run with respect to the time specified at the designated points or any intermediate station where schedule time is earlier than the time specified in the order as before required to run with respect to the schedule time of the train (or trains) named.

All of these examples may be used in connection with an extra train created by example (3) of Form G and the times at each point stated in that example have the same meaning as schedule times in the foregoing examples.

D-Form F. For Sections.

(1.) ——— display signals and run as ——— ——— to ———.
(2.) ——— run as ——— ——— to ———.
(3.) ——— display signals ——— to ——— for ———.
(6.) ——— is withdrawn as ——— at ———.
(7.) ——— instead of ——— display signals and run as ——— ——— to ———.
(8.) ——— take down signals at ———.

EXAMPLES.

(*1.*) *Eng. 20 display signals and run as 1st No. 1 "A" to "Z."*
(*2.*) *Eng. 25 run as 2d No. 1 "A" to "Z."*
(*3.*) *No. 1 display signals "A" to "G" for Eng. 65.*
2d No. 1 display signals "B" to "E" for Eng. 99.

These examples may be modified as follows:

(*4.*) *Engs. 20, 25 and 99 run as 1st, 2d and 3d No. 1, "A" to "Z."*

Example (1) is to be used when the number of the engine for which signals are displayed is unknown and is to be followed by example (2), both being single order examples.

Under examples (2) and (3) the engine named will not display signals.

Under example (4) the engine last named will not display signals.

For changing sections:

To add an intermediate section the following modification of example (1) will be used:

(*5.*) *Eng. 85 display signals and run as 2d No. 1 "N" to "Z." Following sections change numbers accordingly.*

Under (5) Engine 85 will display signals and run as directed and following sections will take the next higher number.

To drop an intermediate section the following example will be used:

(6.) *Eng. 85 is withdrawn as 2d No. 1 at "H." Following sections change numbers accordingly.*

Under (6) Engine 85 will drop out at "H" and following sections will take the next lower number.

To substitute one engine for another on a section, the following will be used:

(7.) *Eng. 18 instead of Eng. 85 will display signals and run as 2d No. 1 "R" to "Z."*

Under (7) Engine 85 will drop out at "R" and Engine 18 will run as directed.

If Engine 85 is last section the words "display signals and" will be omitted. Following sections need not be addressed.

To discontinue the display of signals the following example will be used:

(8.) *2d No. 1 take down signals at "D."*

Under example (8) 2d No. 1 will take down signals as directed and a following section must not proceed beyond the point named.

The character of a train for which signals are displayed may be stated. Each section affected by the order must have copies, and must arrange signals accordingly.

To annul a section for which signals have been displayed over a division or any part thereof, when no train is to follow the signals, Form K must be used.

FORM G. EXTRA TRAINS.

(1.) Eng. ——— run extra ——— to ———.
(2.) Eng. ——— run extra ——— to ——— and return to ———.

EXAMPLES.

(1.) *Eng. 99 run extra "A" to "F."*
(2.) *Eng. 99 run extra "A" to "F" and return to "C."*

Under (2) the extra must go to "F" before returning to "C."

(3.) Eng. ——— run extra leaving ——— on ——— as follows with right over all trains:

Leave ———.
" ———.
Arrive ———.

EXAMPLE.

(3.) *Eng. 77 run extra leaving "A" on Thursday, Feb. 17th, as follows with right over all trains:*

Leave "A" 11:30 p. m.
" "C" 12:25 a. m.
" "E" 1:47 a. m.
Arrive "F" 2:22 a. m.

This order may be varied by specifying the kind of extra and the particular trains over which the extra shall or shall not have right. Trains over which the extra is thus given right must clear the time of the extra ——— minutes.

D-Form H. Work Extra.

Eng. ——— works on ——— track ——— to ——— between ——— and ———.

EXAMPLE.

Eng. 292 works on eastward track (or both tracks) 7 a. m. to 6 p. m. between "D" and "E."

Under (1), the work extra must, whether standing or moving, protect itself within the working limits against extras moving with the current of traffic on the track or tracks named, as prescribed by Rule 99. The time of regular trains must be cleared.

This form may be modified by adding:

(2.) *Not protecting against extras.*

Under (2), protection against extra trains is not required. The time of regular trains must be cleared.

To enable a work extra to work upon the time of a regular train, the following form may be used:

(3.) *Work extra 292 protects against No. 55 (or ——— class trains) between "D" and "E."*

Under (3), the work extra may work upon the time of the train (or trains) mentioned in the order and must protect against such train (or trains) as prescribed by Rule 99.

The regular train or trains receiving the order will run expecting to find the work extra protecting itself.

When it is desired to move a train against the current of traffic over the working limits, provision must be made for the protection of such movement.

When a work extra is to be given exclusive right over all trains, the following form will be used:

(4). Work extra ——— has right over all trains on ——— track between ——— and ——— ———m to ———m.

EXAMPLE.

(*4.*) *Work extra 275 has right over all trains on eastward and westward tracks between "G" and "H" 7 p. m. to 12 night.*

This gives the work extra the exclusive right to the track (or tracks) mentioned between the points designated between the times named.

Work extras must give way to all trains as promptly as practicable.

The working limits should be as short as practicable; to be changed as the progress of the work may require.

Form J. Holding Order.

Hold ———.

EXAMPLES.

Hold No. 2.
Hold all (or ——— ward) trains.

When a train has been so held it must not proceed until the order to hold is annulled, or an order given to the operator in the form:

"——— *may go.*"

These orders will be addressed to the operator and acknowledged in the usual manner, and will be delivered to conductors and enginemen of all trains affected.

Form J will only be used when necessary to hold trains until orders can be given, or in case of emergency.

FORM K. ANNULLING A SCHEDULE OR A SECTION.

——— of ——— is annulled ——— to ———.

EXAMPLES.

No. 1 of Feb. 29th is annulled "A" to "Z."
2d No. 5 of Feb. 29th is annulled "E" to "G."

The schedule or section annulled becomes void between the points named and cannot be restored.

FORM L. ANNULLING AN ORDER.

"Order No. ——— is annulled."

EXAMPLE.

Order No. 10 is annulled.

If an order which is to be annulled has not been delivered to a train, the annulling order will be addressed to the operator, who will destroy all copies of the order annulled but his own, and write on that:

Annulled by order No. ———.

An order which has been annulled must not be reissued under its original number.

D-FORM M. ANNULLING PART OF AN ORDER.

That part of Order No. ——— reading ——— is annulled.

EXAMPLE.

That Part of Order No. 10 reading Extra 263 west pass No. 1 at "S" is annulled.

D-FORM P. SUPERSEDING AN ORDER OR A PART OF AN ORDER.

This order will be given by adding to prescribed forms, the words "instead of ———."

(1.) ——— pass ——— at ——— instead of ———.

(2.) ——— display signals for ——— ——— to ——— instead of ———.

EXAMPLES.

(1.) No. 1 pass No. 3 at "C" instead of "B."
(2.) No. 1 display signals for Eng. 85 "A" to "Z" instead of "G."

An order which has been superseded must not be reissued under its original number.

D-FORM R. PROVIDING FOR A MOVEMENT AGAINST THE CURRENT OF TRAFFIC.

——— has right over opposing trains on ——— track ——— to ———.

EXAMPLE.

(1.) No. 1 has right over opposing trains on No. 2 (or eastward) track "C" to "F."

A train must not be moved against the current of traffic until the track on which it is to run has been cleared of opposing trains.

Under this order the designated train must use the track specified between the points named and has right over opposing trains on that track between those points. Opposing trains must not leave the point last named until the designated train arrives.

An inferior train between the points named moving with the current of traffic in the same direction as the designated train must receive a copy of the order, and may then proceed on its schedule, or right.

This order may be modified as follows:

(2.) After ——— arrives at ——— ——— has right over opposing trains on ——— track ——— to ———.

EXAMPLE.

After No. 4 arrives at "C" No. 1 has right over opposing trains on No. 2 (or eastward) track "C" to "F."

Under (2) the train to be moved against the current of traffic must not leave the first named point until the arrival of the first named train.

D-FORM S. PROVIDING FOR THE USE OF A SECTION OF DOUBLE TRACK AS SINGLE TRACK.

——— track will be used as single track between ——— and ———.

If it is desired to limit the time for such use add (from ——— until ———).

EXAMPLE.

No. 1 (or westward) track will be used as single track between "F" and "G."

Adding if desired

from 1 p. m. until 3 p. m.

Under this order all trains must use the track specified between the stations named and will be governed by rules for single track.

Trains running against the current of traffic on the track named must be clear of the track at the expiration of the time named, or protected as prescribed by Rule 99.

Forms of Blanks for Single and Double Track.

SPECIFICATIONS FOR TRAIN ORDER FORM AND BOOKS FOR OPERATORS FOR 31 ORDERS.

Form as here shown. Blank space for order (4) inches with no lines. The mode of filling the blanks is indicated by small type.

Form (6¾ x 9¼) inches beyond perforated line. Book (6¾ x 10½) inches.

300 leaves. Glued at top or side. Manilla cover on face and stiff back.

Paper opaque, yellow, sized, and of such thickness as to admit of making (9) good manifold copies with Stylus and double carbons.

To be used with double Carbon Paper (6¾ x 9) inches, and a stiff tin, same size, corners rounded.

Standard Train Order Blank for 31 Order.

FORM 31 | FORM 31

(NAME.) COMPANY.

TRAIN ORDER No. 10

March 21 19

To ..... | At .....

X ..... (Initials) ..... Opr.; ..... 1 45 A M

Conductor and Engineman must both have a copy of this order.

Repeated at 2:20 A M.

Conductor	Engineman	Train	Made	Time	Opr.
Jones	Brown	45	Complete	2 20am	Black
	(Omit				
	this column				
	where				
	Engineman				
	is not				
	required				
	to sign.)				

SPECIFICATIONS FOR TRAIN ORDER FORM AND BOOKS FOR OPERATORS FOR 19 ORDERS.

Form as here shown. Blank space for order (4) inches with no lines. The mode of filling the blanks is indicated by small type.

Form (6¾ x 6) inches beyond perforated line. Book (6¾ x 7½) inches.

300 leaves. Glued at top or side. Manilla cover on face and stiff back.

Paper opaque, green, sized, and of such thickness as to admit of making (9) good manifold copies with Stylus and double carbons.

To be used with double Carbon Paper (6¾ x 7) inches and a stiff tin, same size, corners rounded.

Standard Train Order Blank for 19 Order.

FORM 19 | FORM 19

(NAME) COMPANY.

TRAIN ORDER No. 10

March 21 19

To ..... | At .....

X ..... (INITIALS.) ..... Opr.; ..... 1 45 A M

Conductor and Engineman must each have a copy of this order.

Made complete time 2 16 P M Black Opr.

(To be printed on yellow paper.)

FORM—(A).

_____ COMPANY.

(NAME) .....

...CLEARANCE CARD...

March 21 19

Dover 9:15 A. M.

Conductor and Engineman No. 12.

I have (8) (No) (No further) orders for your train.

Signal is displayed for Extra 418

John Jones

Operator.

This does not affect any orders you may have received.

Conductor and Engineman must each have a copy, and see that their train is correctly designated in the above form.

TRAIN RULES FOR THREE AND FOUR TRACKS.*

F-271. One of the main tracks will be designated as No. 1; additional tracks will be numbered therefrom, even numbers to the right, odd numbers to the left, when facing East or North.

F-272. The use of these tracks, both as to the class and the current of traffic, will be designated on the time-table or by special instructions.

F-273. On portions of the road so specified on the time-table, trains will run with the current of traffic by block signals, whose indications will supersede time-table superiority.

F-274. A train by night running with the current of traffic, on a high speed track, will display two red lights to the rear.†

A train by night running with the current of traffic, on a slow speed track, or a train by night using any track against the current of traffic, will display a green light to the rear on the side next to the high speed track in the direction of the current of traffic, and a red light on the opposite side.†

A train by night on a siding will display two green lights to the rear.

F-275 ENGINE STEAM WHISTLE SIGNALS.

Note.—The signals prescribed are illustrated by "o" for short sounds; "—" for longer sounds. The sound of the whistle should be distinct, with intensity and duration proportionate to the distance signal is to be conveyed.

SOUND.	INDICATION.
(*a*) — — — — —	Flagman for Track No. 1 return from the rear.
(*b*) — — — —	Flagman for Track No. 2 return from the rear.
(*c*) — — — — — o	Flagman for Track No. 3 return from the rear.
(*d*) — — — — o	Flagman for Track No. 4 return from the rear.
(*e*) o — — — — — —	Flagman for Track No. 1 return from the front.
(*f*) o — — — —	Flagman for Track No. 2 return from the front.
(*g*) o — — — — — — o	Flagman for Track No. 3 return from the front.
(*h*) o — — — — o	Flagman for Track No. 4 return from the front.

F-276. Except as affected by these rules, all Block Signal Rules and Train Rules for Double Track remain in force.

* Adopted April 5, 1905.

† See diagrams, pages 562a, 562b.

DIAGRAMS OF HAND, FLAG AND LAMP SIGNALS.*

"Proceed."
Raised and lowered vertically.
See Rule 12 (*b*).

"Stop."
Swung across the track.
See Rule 12 (*a*).

* The hand or a flag moved the same as the lamp as illustrated in the diagrams gives the same indication.

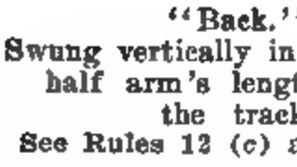

"Back."
Swung vertically in a circle at half arm's length across the track.
See Rules 12 (*c*) and 14 (*h*).

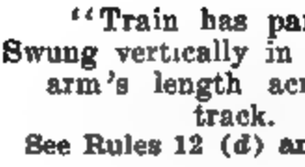

"Train has parted."
Swung vertically in a circle at arm's length across the track.
See Rules 12 (*d*) and 14 (*f*).

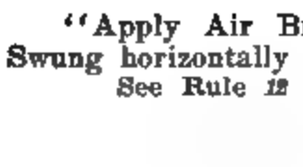

"Apply Air Brakes."
Swung horizontally in a circle.
See Rule 12 (*e*)

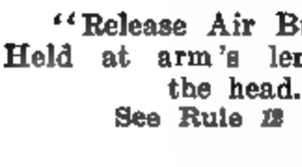

"Release Air Brakes."
Held at arm's length above the head.
See Rule 12 (*f*).

DIAGRAMS OF TRAIN SIGNALS.*

Rear of train by day.
Green flags at AA as markers.
See Rule 19.

* The diagrams are intended to illustrate the general location of the train signals, not the exact manner in which they are to be attached. Combination lamps with four illuminated colored faces are represented in the diagrams.

Rear of train by night while running.
Lights at AA as markers showing green toward Engine.
and side and red to rear.
See Rule 19.

Rear of train by night when on siding to be passed by another train.

Lights at AA as markers, showing green toward Engine side and to rear.

See Rule 19.

Engine running *ying signals*
for a following section.
Green flags at AA.
See Rule 20.

Engine running forward at night displaying signals
for a following section.
Green lights and green flags at AA.
See Rule 20.

Engine running backward by day, without cars or at the rear of a train pushing cars, and displaying signals for a following section.

Green flags at AA.

See Rule 20.

Green flags at BB, as markers.

See Rule 19.

Engine running backward by night, without cars or at the rear of a train pushing cars, and displaying signals for a following section.

Green lights and green flags at AA.

See Rule 20.

Lights at BB, as markers, showing green at side and in direction engine is moving and red in opposite direction.

See Rule 19.

Engine running forward by day as an extra train.
White flags at AA.
See Rule 21.

Engine running forward by night as an extra train.
White lights and white flags at **AA.**
See Rule 21.

Engine running backward by day as an extra train, without cars or at the rear of a train pushing cars.

White flags at AA.
See Rule 21.

Green flags at BB, as markers.
See Rule 19.

Engine running backward by night as an extra train, without cars or at the rear of a train pushing cars.

White lights and white flags at AA.
See Rule 21.

Lights at BB, as markers, showing green at side and in direction engine is moving and red in opposite direction.
See Rules 19 and 21.

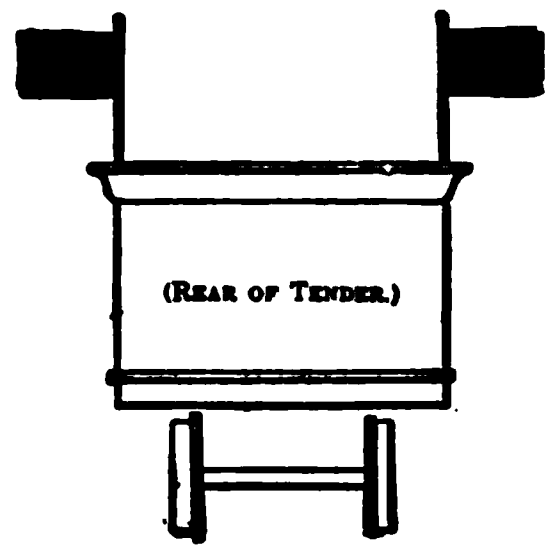

Engine running forward by day without cars or at the rear of a train pushing cars.

Green flags as markers.

See Rule 19.

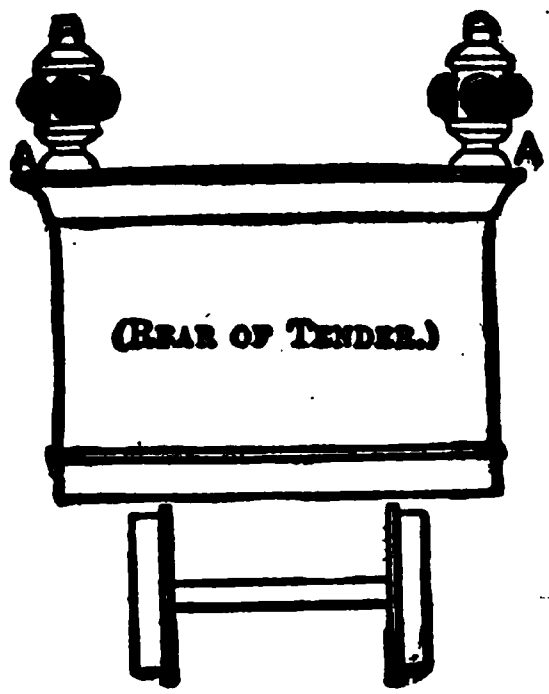

Engine running forward by night without cars or at the rear of a train pushing cars.

Lights at AA, as markers, showing green to the front and side and red to rear.

See Rule 19.

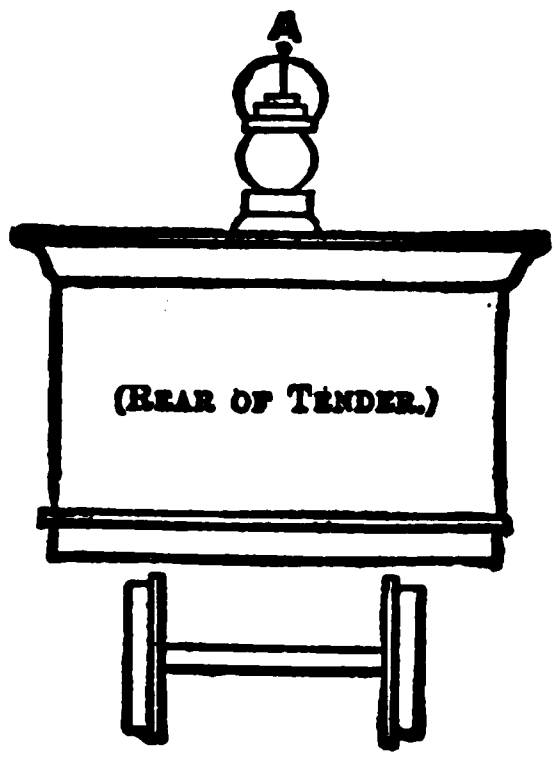

Engine running backward by night without cars or at the front of a train pulling cars.

White light at A.

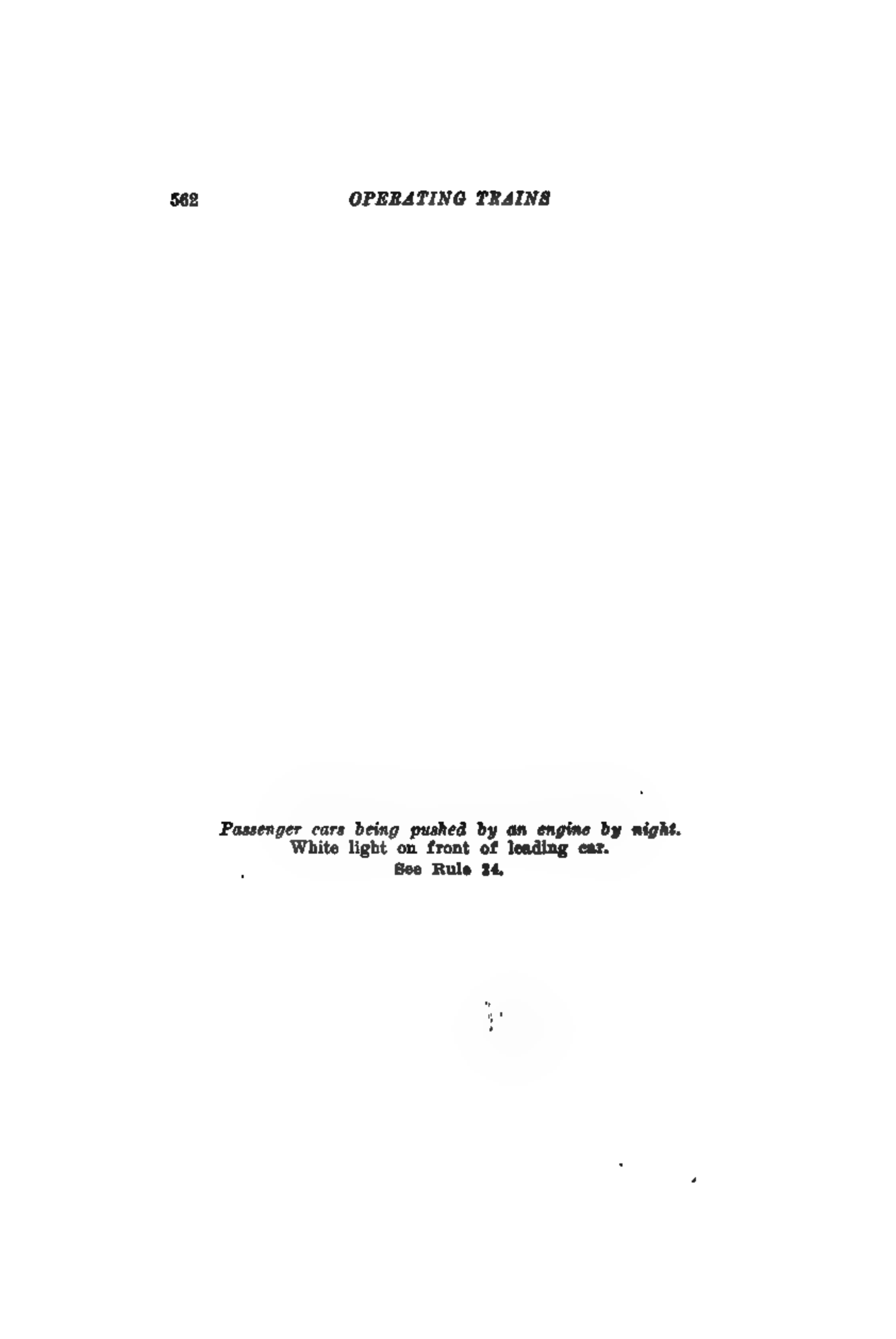

Passenger cars being pushed by an engine by night.
White light on front of leading car.
See Rule 24.

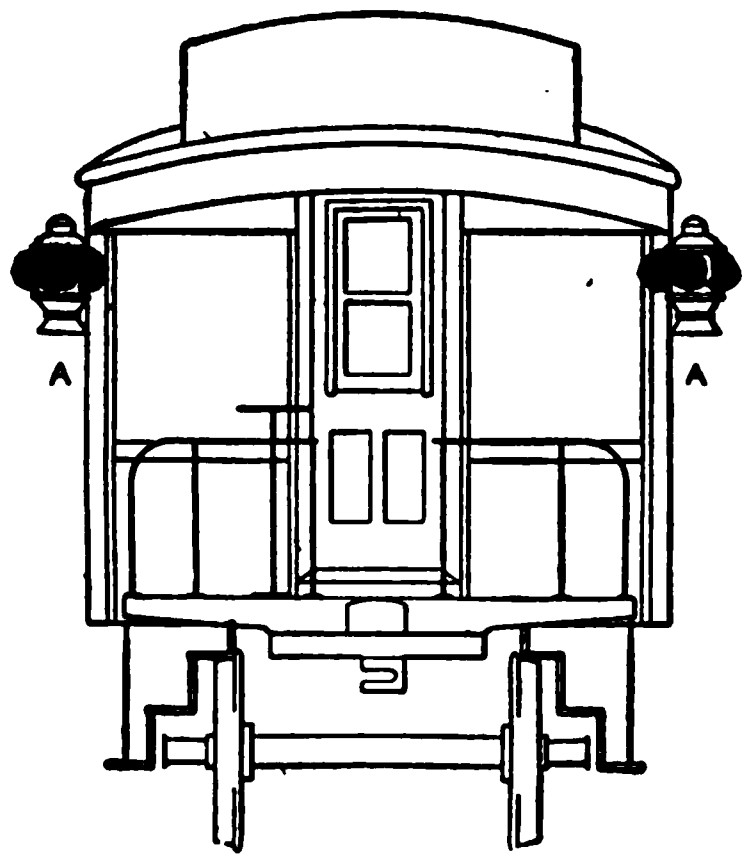

(Outside.) (Between tracks.)

Rear of train by night running against the current of traffic.
(This illustration is for a road which uses the right hand track.)
Lights at A A as markers.
See Rule D-19.

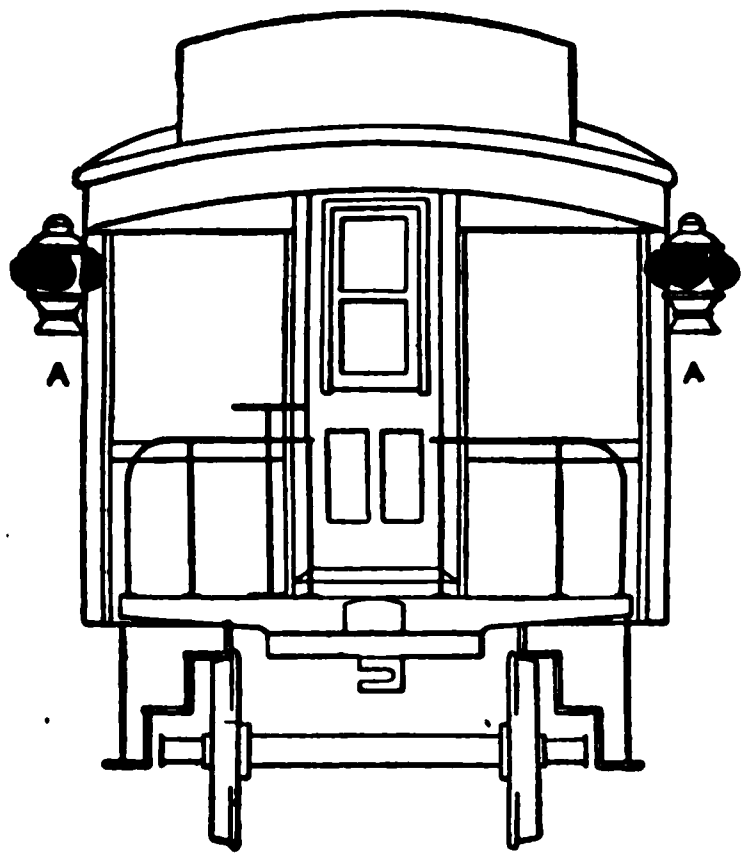

Rear of train by night running with the current of traffic on a high speed track.
Lights at A A as markers.
See Rule F-274.

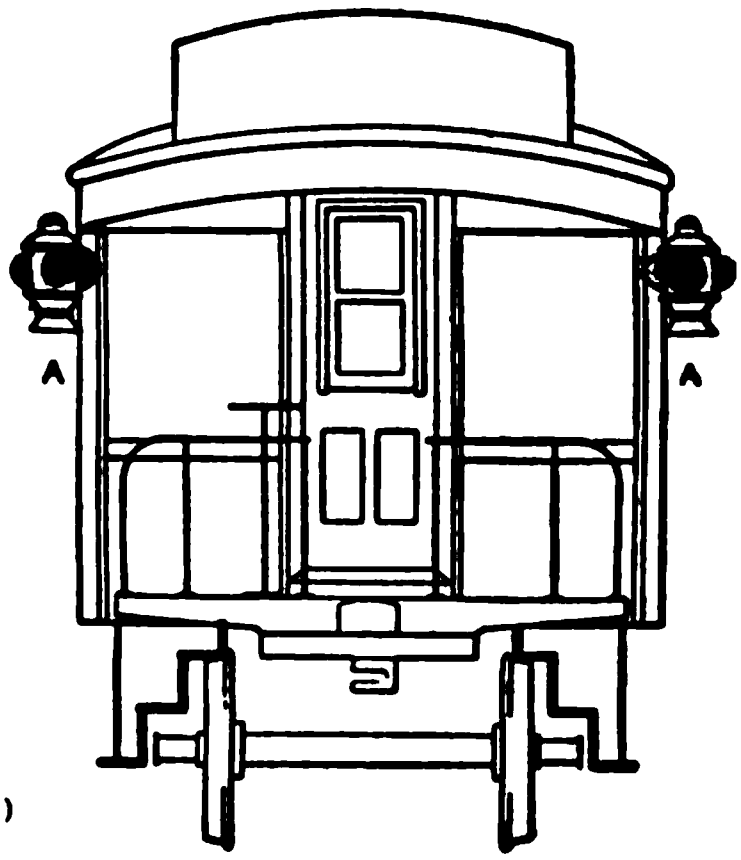

(High Speed Track.)
A A

Rear of train by night running with the current of traffic on a slow speed track.

Lights at A A as markers.

See Rule F-274.

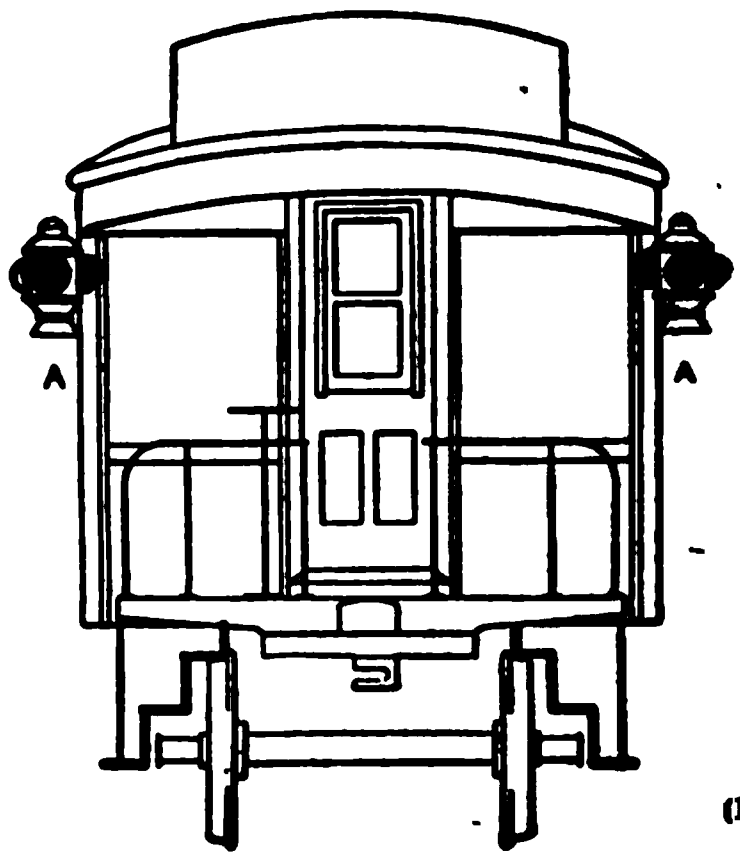

(High Speed Track.)
A A

Rear of train by night running on any track against the current of traffic.

Lights at A A as markers.

See Rule F-274.

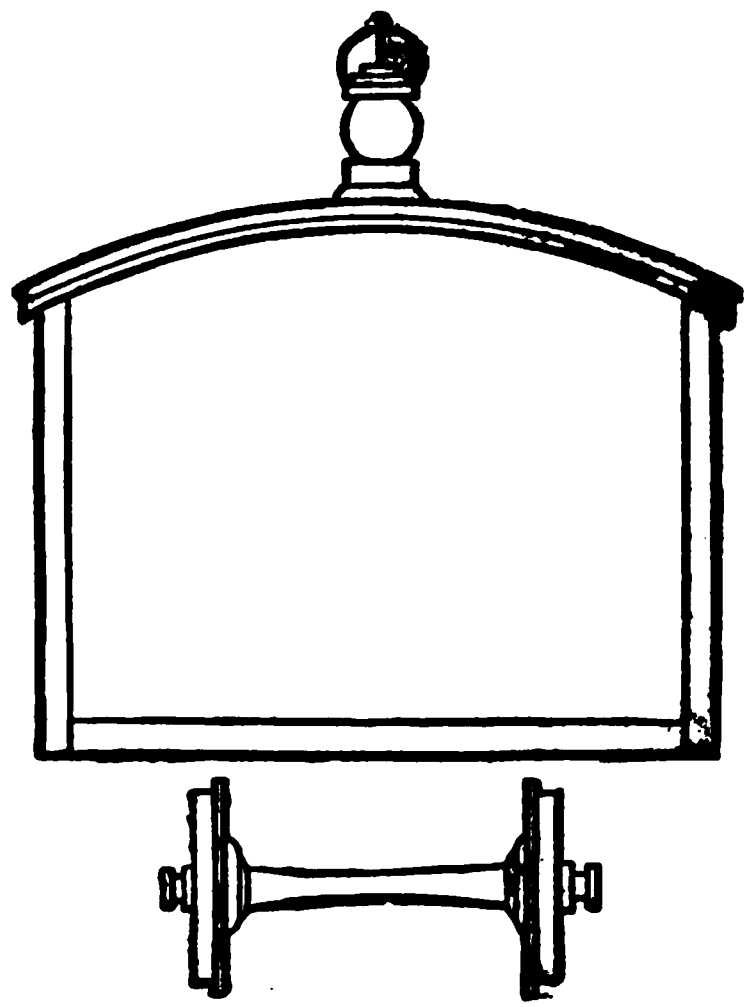

Freight cars being pushed by an engine by night.
White light on front of leading car.
See Rule 24.

CHAPTER XX.

THE STANDARD CODE OF RULES AND REGULATIONS GOVERNING THE MOVEMENT OF TRAINS. (CONTINUED.)

BLOCK SYSTEMS. BLOCK SIGNAL RULES. MANUAL BLOCK SYSTEM — CONTROLLED MANUAL BLOCK SYSTEM — AUTOMATIC BLOCK SYSTEM.

BLOCK SIGNAL RULES.*

Definitions.

BLOCK.—A length of track of defined limits, the use of which by trains is controlled by block signals.

BLOCK STATION.—A place from which block signals are operated.

FIXED SIGNAL.—A signal of fixed location, indicating a condition affecting the movement of a train.

BLOCK SIGNAL.—A fixed signal controlling the use of a block.

HOME BLOCK SIGNAL.—A fixed signal at the entrance of a block to control trains in entering and using said block.

DISTANT BLOCK SIGNAL.—A fixed signal used in connection with a Home (and Advance) Block Signal to regulate the approach thereto.

ADVANCE BLOCK SIGNAL.—A fixed signal used in connection with a Home Block Signal to sub-divide the block in advance.

BLOCK SYSTEM.—A series of consecutive blocks.

MANUAL BLOCK SYSTEM.—A block system in which the signals are operated manually.

CONTROLLED MANUAL BLOCK SYSTEM.—A block system in which the signals are operated manually, and so constructed as to require the co-operation of the signalmen at both ends of the block to display a Clear or a Caution Block Signal.

AUTOMATIC BLOCK SYSTEM.—A block system in which the signals are operated by electric, pneumatic or other agency actuated by a train, or by certain conditions affecting the use of a block.

* As adopted May 19, 1909.

MANUAL BLOCK SYSTEM.

A series of consecutive blocks, controlled by block signals operated manually, upon information by telegraph, telephone or other means of communication.

Requisites of Installation.

1. Signals of prescribed form, the indications given by not more than three positions; and, in addition, at night by lights of prescribed color.

2. The apparatus so constructed that the failure of any part directly controlling a signal will cause it to display the normal indication.

3. Signals, if practicable, either over or upon the right* of and adjoining the track upon which trains are governed by them. For less than three tracks signals for trains in each direction may be on the same signal mast.

4. Semaphore arms that govern, displayed to the right of the signal mast as seen from an approaching train.

5. The normal indication of Home Block Signals—Stop.

Adjuncts.

The following may be used:

(A) Distant Block Signals† interlocked with Home Block Signals; normal indication—Caution.

(B) Advance Block Signals‡ interlocked with Distant Block Signals, if used; normal indication—Stop.

---

* Where a road is operated with the current of traffic to the left the block signals may be placed upon the left.

† When Distant Block Signals are used the following should be added to Rule 301:

DISTANT BLOCK SIGNALS.

SIGNAL.	OCCASION FOR USE.	INDICATION.	NAME.
Color.	The signal will be displayed when	For enginemen and trainmen.	As used in rules.
(*d*) ——	Home (or advance) signal at (*a*.)	Proceed with caution to the home (or advance) signal.	Caution-signal.
(*e*) ——	Home (and advance) signal at (*c*).	Proceed.	Clear-signal.

Where the semaphore is used, the governing arm is displayed to the right of the signal mast as seen from an approaching train, and the indications are given by positions:

Horizontal as the equivalent of (*d*).

Vertical or Diagonal —— (angle above or below the horizontal) as the equivalent of (*e*).

Rule 311 also should be changed to read "The normal indication of Home Block Signals is Stop; of Distant Block Signals is Caution."

‡ When Advance Block Signals are used, that name should be added to the caption of Rule 301 so as to read "Home and Advance Block Signals," and Rule 311 should be changed to read "The normal indication of Home and Advance Block Signals is Stop."

(C) Repeaters, audible or visible, to indicate the position of block signals to the signalman operating them.

(D) The automatic release of block signals to display the normal indication.

(E) The interlocking of switches with block signals.

(F) Communication between block stations and outlying switches.

(G) The interlocking of telegraph keys with block signals.

RULES.

General Note.—The Committee has found it desirable to leave blanks (——) in certain rules to be filled by each road adopting them, as may best suit its own requirements.

301. HOME BLOCK SIGNALS.

SIGNAL	OCCASION FOR USE.	INDICATION.	NAME.
Color.	The signal will be displayed when	For enginemen and trainmen.	As used in rules.
(*a*) Red.	Block is not clear.	Stop.	Stop-signal.
(*b*) ——.	Block is not clear.	Proceed with caution.	Caution-signal
(*c*) ——.	Block is clear.	Proceed.	Clear-signal.

Where the semaphore is used, the governing arm is displayed to the right of the signal mast as seen from an approaching train, and the indications are given by positions:

Horizontal as the equivalent of (*a*).

Diagonal ———* as the equivalent of (*b*).

Vertical or Diagonal ———* as the equivalent of (*c*).

Note to Rule 301.—* Angle above or below the horizontal.

302. Block signals control the use of the blocks, but, unless otherwise provided, do not supersede the superiority of trains; nor dispense with the use or the observance of other signals whenever and wherever they may be required.

303. When a block station is open at an irregular hour, trains must be notified by train order or by special instructions, and special precautions must be taken to call the attention of trains approaching the block station to the indications of the block signals.

Signalmen.

311. The normal indication of Home Block Signals is Stop.

312. Signals must be operated carefully and with a uniform movement. If a signal fails to work properly its operation must be discontinued and the signal secured so as to display the normal indication until repaired.

313. Signalmen must observe, as far as practicable, whether

the indications of the signals correspond with the positions of the levers.

314. Signalmen must not make nor permit any unauthorized repairs, alterations or additions to the apparatus.

315. A block record must be kept at each block station.

Note to Rule 315.—The different items to be entered on the block record have not been prescribed in this rule but it has been left to each road to complete the rule by adding such items as may be necessary to meet the conditions governing its traffic.

316. The prescribed communicating code is as follows:

1—Display Stop-signal.
13—I understand.
17—Display Stop-signal. Train following.
2—Block clear.
3—Block wanted for train other than passenger.
36—Block wanted for passenger train.
4—Train other than passenger has entered block.
46—Passenger train has entered block.
5—Block is not clear of train other than passenger.
56—Block is not clear of passenger train.
7—Train following.
8—Opening block station. Answer by record of trains in the extended block.
9—Closing block station. Answer by 13.

Note to Rule 316.—Additions to the code may be made if desired.

317 (A). To admit a train to a block, the signalman must examine the block record, and, if the block is clear, give "1 for ———" to the next block station in advance. The signalman receiving this signal, if the block is clear, must display the Stop-signal to opposing trains, and reply "2 for ———." If the block is not clear, he must reply "5 of ———," or "56 of ———." The signalman at the entrance of the block must then display the proper signal indication.

A train must not be admitted to a block unless it is clear, except as provided in Rule 332 or by train order.

Note to Rule 317 (A) —317 (A) is for absolute block for following and opposing movements on the same track.

317 (B). To admit a train to a block, the signalman must examine the block record, and, if the block is clear, give "1 for ———" to the next block station in advance. The signalman receiving this signal, if the block is clear, must display the Stop-signal to opposing trains and reply "2 for ———." If the block is not clear, he must reply "5 of ———," or "56 of ———." The signalman at the entrance of the block must then display the proper signal indication.

A train must not be admitted to a block which is occupied by an opposing train or by a passenger train, except as provided in Rule 332 or by train order.

To permit a train to follow a train other than a passenger train into a block, the signalman must give "17 for ———" to

the next block station in advance. The signalman receiving this signal, if there is no passenger train in the block, must reply "5 of ——— 13 for ———." The approaching train will then be admitted to the block ———.*

Note to Rule 317 (B)—

Rule 317 (B) is for absolute block for opposing movements, and permissive block for following movements on the same track.

318 (A). To admit a train to a block, the signalman must examine the block record, and, if the block is clear, give "3 for ———," or "36 for ———," to the next block station in advance. The signalman receiving this signal, if the block is clear, must reply "2 for ———." If the block is not clear, he must reply "5 of ———," or "56 of ———." The signalman at the entrance of the block must then display the proper signal indication.

A train must not be admitted to a block unless it is clear, except as provided in Rule 332 or by train order.

Note to Rule 318 (A).—Rule 318 (A) is for absolute block for following movements only.

318 (B). To admit a train to a block, the signalman must examine the block record, and, if the block is not occupied by a passenger train, give "3 for ———," or "36 for ———," to the next block station in advance. The signalman receiving this signal, if the block is clear, must reply "2 for ———." If the block is not clear, he must reply "5 of ———," or "56 of ———." The signalman at the entrance of the block must then display the proper signal indication.

A train must not be admitted to a block which is occupied by a passenger train, except as provided in Rule 332 or by train order.

A train may be permitted to follow a train other than a passenger train into a block ———.*

Note to Rule 318 (B)—

Rule 318 (B) is for permissive block for following movements only.

Note to Rules 317 (A), 317 (B), 318 (A) and 318 (B).—

Where it is desired that train dispatchers shall control the display of block signals, roads may modify Rules 317 (A), 317 (B), 318 (A) and 318 (B) so as to provide for such practice.

319. When a train enters a block, the signalman must give "4 ———," or "46 ———" and the time, to the next block station in advance, and when the train has passed the Home Block Signal and the signalman has seen the markers he must display the Stop signal, and when the rear of the train has passed ——— feet beyond the Home Block Signal, he must give the record of the train to the next block station in the rear.

This information must be entered on the block records.

Note to Rules 317 (A), 317 (B), 318 (A), 318 (B) and 319.—The blanks in Rules 317 (A), 317 (B), 318 (A), 318 (B) and 319

---

* Under Caution-signal or with Caution Card (Form B).

are to be filled by the number or designation of the train, except as otherwise noted.

320. Unless otherwise provided, signalmen must not ask for the block until they have received 4 or 46 from the next block station in the rear.

321. Signalmen must observe all passing trains and note whether they are complete and in order, and the markers properly displayed.

322. Should a train pass a block station with any indication of conditions endangering the train, or a train on another track, the signalman must immediately notify the signalman at the next block station in advance, and each must display Stop-signals to all trains that may be affected, and must not permit any train to proceed until it is known that its track is not obstructed.

323. Should a train pass a block station without markers, the signalman must notify the signalman at the next block station in each direction, and must not report that train clear of the block until he has ascertained that the train is complete.

324. Should a train pass a block station in two or more parts the signalman must stop all trains running in the same direction and notify the signalman at the next block station in advance. A signalman having received this notice must stop any train running in the opposite direction. The Stop-signal must not be displayed to the engineman of the divided train if the train can be admitted to the block in advance under Block Signal Rules; but the Train-parted Signal must be given. Should a train in either direction be stopped, it may be permitted to proceed when it is known that its track is not obstructed.

325. A signalman informed of any obstruction in a block must immediately notify the signalman at the other end of the block and each must display Stop-signals to all trains that may be affected and must not permit any train to proceed until it is known that its track is not obstructed.

326. When a train takes a siding the signalman must know that it is clear of the block before giving 2 or displaying a Clear-signal for that block.

The signalman must obtain control of the block before permitting a train on a siding to re-enter the block.

327. To permit a train to cross over or return, unless otherwise provided, the signalman must examine the block record, and if all the blocks affected are clear of approaching trains he must arrange with the signalman at the next block station in each direction to protect the movement, and when the proper signals have been displayed permission may be given. Until the block is clear no train must be admitted in the direction of the cross-over switches except under a Caution-signal or with a Caution Card (Form B).

All cross-over movements must be entered on the block records.

328. When, as provided in Rule 364, coupled trains have been

separated, the signalman must regard each portion as an independent train.

329. If necessary to stop a train for which a Clear or Caution Home (or Advance) Block Signal has been displayed and accepted, the signalman must give hand signals in addition to displaying the Stop-signal.

330. A signalman having orders for a train must display the block signal at Stop. He may permit trains so stopped to proceed under Block Signal Rules after complying with Rules for Movement by Train Orders.

331 (A). If from the failure of block signal apparatus the block signal cannot be changed from the normal indication, a signalman, having information from the signalman at the next block station in advance that the block is clear, may admit a train to the block by the use of a Clearance Card (Form C).

Note to Rule 331 (A).—Rule 331 (A) is for absolute block.

331 (B). If, from the failure of block signal apparatus, the block signal cannot be changed from the normal indication, a signalman having information from the signalman at the next block station in advance that the block is clear, may admit a train to the block by the use of a Clearance Card (Form C); or if the block is occupied by a train, other than an opposing train or a passenger train, he may admit a following train by the use of a Caution Card (Form B).

Note to Rule 331 (B).—Rule 331 (B) is for permissive block.

332. If, from any cause, a signalman be unable to communicate with the next block station in advance, he must stop every train approaching in that direction. Should no cause for detaining the train be known, it may then be permitted to proceed with a Caution Card (Form D), provided ——— minutes have elapsed since the passage of the last preceding train.

333. Signalmen must have the proper appliances for hand signaling* ready for immediate use. Hand signals must not be used when the proper indication can be displayed by the block signals, except as provided in Rule 329, 342 or 375. When hand signals are necessary they must be given from such a point and in such a way that there can be no misunderstanding on the part of enginemen or trainmen as to the signals, or as to the train or engine for which they are given.

Note to Rule 333.—* Hand signaling includes the use of lamp, flag, torpedo and fusee signals.

334. Signalmen will be held responsible for the care of the block station, lamps and supplies; and of the signal apparatus, unless provided for otherwise.

335. Lights within block stations must be so placed that they cannot be seen from approaching trains.

336. Lights must be used upon all block signals from sunset to sunrise and whenever the signal indications cannot be clearly seen without them.

337. If a train over runs a Stop-signal, the fact must be reported to ———.*

338. If a Stop-signal is disregarded, the fact must be reported to the next block station in advance and then to ———.*

339. To open a block station the signalman must give 8 to the next block station in each direction and record the trains that are in the extended block. He must then display the normal signal indication and notify the next block station in each direction that the block station is open.

When trains, which were in the extended block when the block station was opened and which had passed his block station before it was opened, clear the block in advance he must repeat the record to the block station in the rear.

340. A block station must not be closed except upon authority of ———.*

341. A block station must not be closed until the block in each direction is clear of all trains.

To close a block station, the signalman must give 9 to the next block station in each direction, and when he receives 13 enter it on his block record, with the time it is received from each block station.

The block signals must then be ———, all lights extinguished and the block wires arranged to work through the closed block station.

Note to Rule 341.—The arrangement of the block signals under the third paragraph of Rule 341 is left for each road to determine in accordance with its local requirements.

342. When a block station is open at an irregular hour, signalmen must use hand signals, in addition to block signals, to give the required indications until all trains have passed which have not been notified by train order or by special instructions that the block station is open. Signalmen must take special precautions to call the attention of trains approaching the block station to the indications of the block signals.

343. Signalmen must not permit unauthorized persons to enter the block station.

Enginemen and Trainmen.

361. Block signals for a track apply only to trains running with the current of traffic on that track.

362. Trains must not pass a Stop-signal without receiving a Caution Card (Form B or D), a Clearance Card (Form C), or a train order authorizing them to do so.

363. An engineman holding a Caution Card (Form D) must deliver it to the signalman at the next block station and personally obtain from him permission to proceed.

364. Unless directed by special instructions, when two or more trains have been coupled and so run past any block station, they

---

* Designated official.

must be uncoupled only at a block station and the signalman notified.

365. When a train takes a siding it must not again enter the block without the permission of the signalman.

366. Unless otherwise provided, when it is necessary for a train to cross over, the conductor before crossing or returning must notify the signalman and obtain permission to do so.

367. Enginemen and trainmen must not proceed on hand signals as against block signals.

368. The engineman of a train which has parted must sound the whistle signal for Train-parted on approaching a block station.

369. An engineman receiving a Train-parted signal from a signalman must answer by the whistle signal for Train-parted.

370. When a parted train has been recoupled the signalman must be notified.

371. If there is an obstruction between block stations notice must be given to the nearest block signalman.

372. If a train is held by a block signal to exceed ——— minutes, the conductor must ascertain the cause.

373. Conductors must report to ———* any unusual detention at block stations.

374. A block station must not be considered as closed, except as provided on time-table or by special instructions.

375. When a block station is open at an irregular hour, the required block indications will be given by hand signals, in addition to block signals, until all trains have passed which have not received a train order or special instructions that the block station is open.

FORM (B).

(*Name*)

..... COMPANY.

CAUTION CARD.

BLOCK STATION.....; ....M.,.....19 .

To ENGINEMAN,† train No.....on.....track:

Block is not clear. You may proceed with caution, expecting to find track obstructed.

.....*Signalman.*

Engineman† receiving this card properly filled out and signed by the signalman, may proceed with the train under control prepared to stop short of any obstruction in the block.

---

* Designated official.

† On roads where it is desired to give Caution Cards to the conductor, the word "conductor" may be incorporated in the form.

FORM (C).
(*Name*)

..... COMPANY

CLEARANCE CARD.

BLOCK STATION.....; ....M.,.....19 .

TO ENGINEMAN,* train No.....on.....track:

Block is clear. Signal cannot be cleared; proceed.

.....*Signalman.*

This card must be used only in case of failure of block signal apparatus, and when block has been duly reported clear by the signalman at the block station in advance. The engineman* receiving this card properly filled out and signed by the signalman, may proceed.

FORM (D).
(*Name*)

..... COMPANY.

CAUTION CARD.

BLOCK STATION.....; ....M.,.....19 .

TO ENGINEMAN,† train No.....on.....track:

Means of communication have failed. You may proceed with caution, expecting to find track obstructed.

.....*Signalman.*

Enginemen† receiving this card properly filled out and signed by the signalman, may proceed with the train under control prepared to stop short of any obstruction in the block.

CONTROLLED MANUAL BLOCK SYSTEM.

A series of consecutive blocks controlled by block signals operated manually upon information by telegraph, telephone or other means of communication, and so constructed as to require the co-operation of the signalmen at both ends of the block to display a Clear or a Caution Block Signal.

Requisites of Installation.

1. Signals of prescribed form, the indications given by not more than three positions; and, in addition, at night by lights of prescribed color.

2. The apparatus so constructed that the failure of any part directly controlling a signal will cause it to display the normal indication.

3. Signals, if practicable, either over or upon the right‡ of and adjoining the track upon which trains are governed by them. For less than three tracks signals for trains in each direction may be on the same signal mast.

4. Semaphore arms that govern, displayed to the right of the signal mast as seen from an approaching train.

* On roads where it is desired to give Clearance Cards to the conductor, the word "conductor" may be incorporated in the form.

† On roads where it is desired to give Caution Cards to the conductor, the word "conductor" may be incorporated in the form.

‡ Where a road is operated with the current of traffic to the left the block signals may be placed upon the left.

5. The normal indication of Home Block Signals—Stop.

6. The apparatus so constructed that the failure of the block signal, block signal instruments or electric circuits will prevent the display of a Clear Block Signal (or a Caution Home or Advance Block Signal).

Adjuncts.

The following may be used:

(A) Distant Block Signals* interlocked with Home Block Signals; normal indication—Caution.

(B) Advance Block Signals† interlocked with Distant Block Signals, if used; normal indication—Stop.

(C) Repeaters, audible or visible, to indicate the position of block signals to the signalman operating them.

(D) The automatic release of block signals to display the normal indication.

(E) The interlocking of switches with block signals.

(F) Communication between block stations and outlying switches.

(G) Track instruments or releasing circuits so located as to require that the rear of train shall have passed a prescribed distance beyond the Home Block Signal before the signal at the next block station in the rear can be released.

(H) Unlocking circuits between block stations and outlying switches.

(J) Track circuits.

---

* When Distant Block Signals are used the following should be added to Rule 401:

DISTANT BLOCK SIGNALS.

SIGNAL.	OCCASION FOR USE.	INDICATION.	NAME.
Color.	The signal will be displayed when	For enginemen and trainmen.	As used in rules.
(*d*)——.	Home (or advance) signal at (*a*).	Proceed with caution to the home (or advance) signal.	Caution-signal.
(*e*)——.	Home (and advance) signal at (*c*).	Proceed.	Clear-signal.

Where the semaphore is used, the governing arm is displayed to the right of the signal mast as seen from an approaching train, and the indications are given by positions:

Horizontal as the equivalent of (*d*).

Vertical or Diagonal —— (angle above or below the horizontal) as the equivalent of (*e*).

Rule 411 also should be changed to read: "The normal indication of Home Block Signals is Stop; of Distant Block Signals is Caution."

† When Advance Block Signals are used, that name should be added to the caption of Rule 401 so as to read "Home and Advance Block Signals," and Rule 411 should be changed to read "The normal indication of Home and Advance Block Signals is Stop."

RULES.

General Note.—The Committee has found it desirable to leave blanks (——) in certain rules to be filled by each road adopting them, as may best suit its own requirements.

401. HOME BLOCK SIGNALS.

SIGNAL.	OCCASION FOR USE.	INDICATION.	NAME.
Color.	The signal will be displayed when	For enginemen and trainmen.	As used in rules.
(*a*) Red.	Block is not clear.	Stop.	Stop-signal.
(*b*) ——.	Block is not clear.	Proceed with caution.	Caution-signal.
(*c*) ——.	Block is clear.	Proceed.	Clear-signal.

Where the semaphore is used, the governing arm is displayed to the right of the signal mast as seen from an approaching train, and the indications are given by positions:

Horizontal as the equivalent of (*a*).

Diagonal ———* as the equivalent of (*b*).

Vertical or Diagonal ———* as the equivalent of (*c*).

Note to Rule 401.—* Angle above or below the horizontal.

402. Block signals control the use of the blocks, but, unless otherwise provided, do not supersede the superiority of trains; nor dispense with the use or the observance of other signals whenever and wherever they may be required.

403. When a block station is open at an irregular hour, trains must be notified by train order or by special instructions, and special precautions must be taken to call the attention of trains approaching the block station to the indications of the block signals.

Signalmen.

411. The normal indication of Home Block Signals is Stop.

412. Signals must be operated carefully and with a uniform movement. If a signal fails to work properly its operation must be discontinued and the signal secured so as to display the normal indication until repaired.

413. Signalmen must observe, as far as practicable, whether the indications of the signals correspond with the positions of the levers.

414. Signalmen must not make nor permit any unauthorized repairs, alterations or additions to the apparatus.

415. A block record must be kept at each block station.

Note to Rule 415.—The different items to be entered on the block record have not been prescribed in this rule, but it has been left to each road to complete the rule by adding such items as may be necessary to meet the conditions governing its traffic.

416. The prescribed communicating code is as follows:

1—Display Stop-signal.
13—I understand.
17—Display Stop-signal. Train following.
2—Block clear.
3—Block wanted for train other than passenger.
36—Block wanted for passenger train.
4—Train other than passenger has entered block.
46—Passenger train has entered block.
5—Block is not clear of train other than passenger.
56—Block is not clear of passenger train.
7—Train following.
8—Opening block station. Answer by 2, 5, or 56.
9—Closing block station. followed by 2.

If the block is clear. to be answered by 13, followed by 2.

If the block is not clear. to be answered by 5 or 56.

Note to Rule 416.—Additions to the code may be made if desired.

417 A. To admit a train to a block, the signalman must examine the block record, and, if the block is clear, give 1 to the next block station in advance. The signalman receiving this signal, if the block is clear, must display the Stop-signal to opposing trains, unlock the next block station in the rear and reply 2. If the block is not clear, he must reply 5 or 56. The signalman at the entrance of the block must then display the proper signal indication.

A train must not be admitted to a block unless it is clear, except as provided in Rule 432 or by train order.

Note to Rule 417 (A).—417 (A) is for absolute block for following and opposing movements on the same track.

417 (B). To admit a train to a block, the signalman must examine the block record, and, if the block is clear, give 3 or 36 to the next block station in advance. The signalman receiving this signal, if the block is clear, must display the Stop-signal to opposing trains, unlock the next block station in the rear and reply 2. If the block is not clear, he must reply 5 or 56. The signalman at the entrance of the block must then display the proper signal indication.

A train must not be admitted to a block which is occupied by an opposing train or by a passenger train, except as provided in Rule 432 or by train order.

To permit a train to follow a train other than a passenger train into a block, the signalman must give 17 to the next block station in advance. The signalman receiving this signal, if there is no passenger train in the block, must unlock the next block station in the rear and reply 5. The approaching train will then be admitted to the block ———.*

Note to Rule 417 (B).—
Rule 417 (B) is for absolute block for opposing movements and permissive block for following movements on the same track.

* Under Caution Signal or with Caution Card (Form B).

418 (A). To admit a train to a block, the signalman must examine the block record, and, if the block is clear, give 3 or 36 to the next block station in advance. The signalman receiving this signal, if the block is clear, must unlock the next block station in the rear and reply 2. If the block is not clear, he must reply 5 or 56. The signalman at the entrance of the block must then display the proper signal indication.

1. A train must not be admitted to a block unless it is clear, except as provided in Rule 432, or by train order.

Note to Rule 418 (A).—Rule 418 (A) is for absolute block for following movements only.

418 (B). To admit a train to a block, the signalman must examine the block record, and, if the block is not occupied by a passenger train, give 3 or 36 to the next block station in advance. The signalman receiving this signal, if the block is clear, must unlock the next block station in the rear and reply 2. If the block is not clear, he must reply 5 or 56. The signalman at the entrance of the block must then display the proper signal indication.

A train must not be admitted to a block which is occupied by a passenger train, except as provided in Rule 432 or by train order.

A train may be permitted to follow a train other than a passenger train into a block ———.*

Note to Rule 418 (B).—

Rule 418 (B) is for permissive block for following movements only.

Note to Rules 417 (A), 417 (B), 418 (A) and 418 (B).—Where it is desired that train dispatchers shall control the display of block signals, roads may modify Rules 417 (A), 417 (B), 418 (A) and 418 (B) so as to provide for such practice.

419. When a train enters a block the signalman must give 4 or 46 to the next block station in advance, and when the train has passed the Home Block Signal and the signalman has seen the markers he must display the Stop-signal, and when the rear of the train has passed ——— feet beyond the Home Block Signal, he must, if the block is then clear, give 2 to the next block station in the rear.

This information must be entered on the block records.

420. Unless otherwise provided, signalmen must not ask for the block until they have received 4 or 46 from the next block station in the rear, nor unlock the next block station in the rear until the block is asked for by that block station.

421. Signalmen must observe all passing trains and note whether they are complete and in order, and the markers properly displayed.

422. Should a train pass a block station with any indication of conditions endangering the train, or a train on another track, the signalman must immediately notify the signalman at the next

---

* Under Caution-signal or with Caution Card (Form B).

block station in advance, and each must display Stop-signals to all trains that may be affected, and must not permit any train to proceed until it is known that its track is not obstructed.

423. Should a train pass a block station without markers, the signalman must notify the signalman at the next block station in each direction, and must not report that train clear of the block nor unlock the next block station in the rear until he has ascertained that the train is complete.

424. Should a train pass a block station in two or more parts, the signalman must stop all trains running in the same direction and notify the signalman at the next block station in advance. A signalman having received this notice must stop any train running in the opposite direction. The Stop-signal must not be displayed to the engineman of the divided train if the train can be admitted to the block in advance under Block Signal Rules; but the Train-parted Signal must be given. Should a train in either direction be stopped, it may be permitted to proceed when it is known that its track is not obstructed.

425. A signalman informed of any obstruction in a block must immediately notify the signalman at the other end of the block and each must display Stop-signals to all trains that may be affected and must not permit any train to proceed until it is known that its track is not obstructed.

426. When a train takes a siding the signalman must know that it is clear of the block before giving 2 or displaying a Clear-signal for that block.

The signalman must obtain control of the block before permitting a train on a siding to re-enter the block.

427. To permit a train to cross over or return, unless otherwise provided, the signalman must examine the block record, and if all the blocks affected are clear of approaching trains he must arrange with the signalman at the next block station in each direction to protect the movement, and when the proper signals have been displayed permission may be given. Until the block is clear no train must be admitted in the direction of the cross-over switches except under a Caution-signal or with a Caution Card (Form B).

All cross-over movements must be entered on the block records.

428. When, as provided in Rule 464, coupled trains have been separated, the signalman must regard each portion as an independent train.

429. If necessary to stop a train for which a Clear or Caution Home (or Advance) Block Signal has been displayed and accepted, the signalman must give hand signals in addition to displaying the Stop-signal.

436. A signalman having orders for a train must display the block signal at Stop. He may permit trains so stopped to proceed under Block Signal Rules after complying with Rules for Movement by Train Orders.

431 (A). If from the failure of block signal apparatus the block signal cannot be changed from the normal indication, a signalman having information from the signalman at the next block station in advance, that the block is clear, may admit a train to the block by the use of a Clearance Card (Form C).

Note to Rule 431 (A).—Rule 431 (A) is for absolute block.

431 (B). If, from the failure of block signal apparatus, the block signal cannot be changed from the normal indication, a signalman, having information from the signalman at the next block station in advance that the block is clear, may admit a train to the block by the use of a Clearance Card (Form C); or if the block is occupied by a train, other than an opposing train or a passenger train, he may admit a following train by the use of a Caution Card (Form B).

Note to Rule 431 (B).—Rule 431 (B) is for permissive block.

432. If, from any cause, a signalman be unable to communicate with the next block station in advance, he must stop every train approaching in that direction. Should no cause for detaining the train be known, it may then be permitted to proceed with a Caution Card (Form D), provided ——— minutes have elapsed since the passage of the last preceding train.

433. Signalmen must have the proper appliances for hand signaling ready for immediate use. Hand signals must not be used when the proper indication can be displayed by the block signals, except as provided in Rule 429, 442 or 475. When hand signals are necessary they must be given from such a point and in such a way that there can be no misunderstanding on the part of enginemen or trainmen as to the signals, or as to the train or engine for which they are given.

Note to Rule 433.— Hand signaling includes the use of lamp, flag ,torpedo and fusee signals.

434. Signalmen will be held responsible for the care of the block station, lamps and supplies; and of the signal apparatus, unless provided for otherwise.

435. Lights within block stations must be so placed that they cannot be seen from approaching trains.

436. Lights must be used upon all block signals from sunset to sunrise and whenever the signal indications cannot be clearly seen without them.

437. If a train over runs a Stop-signal, the fact must be reported to ———.*

438. If a Stop-signal is disregarded, the fact must be reported to the next block station in advance and then to ———.*

439. To open a block station the signalman must give 8 to the next block station in each direction and record the trains that are in the extended block. He must then display the normal signal indication and notify the next block station in each direction that the block station is open.

When trains, which were in the extended block when the block

* Designated official.

station was opened and which had passed his block station before it was opened, clear the block in advance he must repeat the record to the block station in the rear.

440. A block station must not be closed except upon authority of ———.*

441. A block station must not be closed until the block in each direction is clear of all trains.

To close a block station, the signalman must give 9 to the next block station in each direction and when he receives 13 enter it on his block record, with the time it is received from each block station.

The block signals must then be ———, all lights extinguished, and the block wires and circuits arranged to work through the closed block station.

Note to Rule 441.—The arrangement of the block signals under the third paragraph of Rule 441 is left for each road to determine in accordance with its local requirements.

442. When a block station is open at an irregular hour, signalmen must use hand signals, in addition to block signals, to give the required indications until all trains have passed which have not been notified by train order or by special instructions that the block station is open. Signalmen must take special precautions to call the attention of trains approaching the block station to the indications of the block signals.

443. Signalmen must not permit unauthorized persons to enter the block station.

Enginemen and Trainmen.

461. Block signals for a track apply only to trains running with the current of traffic on that track.

462. Trains must not pass a Stop-signal without receiving a Caution Card (Form B or D), a Clearance Card (Form C) or a train order authorizing them to do so.

463. An engineman holding a Caution Card (Form D) must deliver it to the signalman at the next block station and personally obtain from him permission to proceed.

464. Unless directed by special instructions, when two or more trains have been coupled and so run past any block station, they must be uncoupled only at a block station and the signalman notified.

465. When a train takes a siding it must not again enter the block without the permission of the signalman.

466. Unless otherwise provided, when it is necessary for a train to cross over, the conductor before crossing or returning, must notify the signalman and obtain permission to do so.

467. Enginemen and trainmen must not proceed on hand signals as against block signals.

---

* Designated official.

468. The engineman of a train which has parted must sound the whistle signal for Train-parted on approaching a block station.

469. An engineman receiving a Train-parted signal from a signalman must answer by the whistle signal for Train-parted.

470. When a parted train has been recoupled the signalman must be notified.

471. If there is an obstruction between block stations notice must be given to the nearest block signalman.

472. If a train is held by a block signal to exceed ——— minutes, the conductor must ascertain the cause.

473. Conductors must report to ———* any unusual detention at block stations.

474. A block station must not be considered as closed, except as provided on time-table or by special instructions.

475. When a block station is open at an irregular hour, the required block indications will be given by hand signals, in addition to block signals, until all trains have passed which have not received a train order or special instructions that the block station is open.

FORM (B).
(*Name*)

..... Company.

CAUTION CARD.

BLOCK STATION.....; ....M., ... 19 .

TO ENGINEMAN,† train No.....on.....track:

Block is not clear. You may proceed with caution, expecting to find track obstructed.

.....*Signalman.*

Enginemen† receiving this card properly filled out and signed by the signalman, may proceed with the train under control prepared to stop short of any obstruction in the block.

FORM (C).
(*Name*)

..... Company.

CLEARANCE CARD.

BLOCK STATION.....; ....M., ... 19 .

TO ENGINEMAN,‡ train No.....on.....track:

Block is clear. Signal cannot be cleared; proceed.

.....*Signalman.*

This card must be used only in case of failure of block signal apparatus, and when block has been duly reported clear by the signalman at the block station in advance. The engineman‡

---

* Designated official.

† On roads where it is desired to give Caution Cards to the conductor, the word "conductor" may be incorporated in the form.

‡ On roads where it is desired to give Clearance Cards to the conductor, the word "conductor" may be incorporated in the form.

receiving this card properly filled out and signed by the signalman, may proceed.

FORM (D).

(*Name*)

..... Company.

CAUTION CARD.

BLOCK STATION.....; ....M., ... 19 .

TO ENGINEMAN,* train No....,..on.....track:

Means of communication have failed. You may proceed with caution, expecting to find track obstructed.

.....*Signalman.*

Enginemen* receiving this card properly filled out and signed by the signalman, may proceed with the train under control prepared to stop short of any obstruction in the block.

AUTOMATIC BLOCK SYSTEM.

A series of consecutive blocks controlled by block signals operated by electric, pneumatic or other agency, actuated by a train or by certain conditions affecting the use of a block.

Requisites of Installation.

1. Signals of prescribed form, the indications given by not more than three positions; and, in addition, at night by lights of prescribed color.

2. The apparatus so constructed that the failure of any part controlling the Home Block Signal will cause it to indicate—Stop.

3. Signals, if practicable, either over or upon the right† of and adjoining the track upon which trains are governed by them. For less than three tracks, signals for trains in each direction may be on the same signal mast.

4. Semaphore arms that govern, displayed to the right of the signal mast as seen from an approaching train.

5. Switches in the main track so connected with the block signals that the Home Block Signal in the direction of approaching trains will indicate Stop when the switch is not set for the main track.

6. Signal connections and operating mechanism so arranged that a Home Block Signal will indicate Stop after the ———‡ of a train shall have passed it.

---

* On roads where it is desired to give Caution Cards to the conductor, the word "conductor" may be incorporated in the form.

† Where a road is operated with the current of traffic to the left the block signals may be placed upon the left.

‡ The front, or rear.

Adjuncts.

The following may be used:

(A) Distant Block Signals* connected with corresponding Home Block Signals and so constructed that the failure of any part controlling the signal shall cause it to indicate—Caution.

(B) Track Circuits.

(C) Indicators at main track switches.

RULES.

General Note: The Committee has found it desirable to leave blanks (——) in certain rules to be filled by each road adopting them, as may best suit its own requirements.

501. HOME BLOCK SIGNALS.

SIGNAL.	OCCASION FOR USE.	INDICATION.	NAME.
Color.	The signal will appear when	For enginemen and trainmen.	As used in rules.
(*a*) Red.	Block is not clear.	Stop.	Stop-signal.
(*b*) ——.	Block is clear. Second block in advance is not clear.	Approach next home signal prepared to stop.	Caution-signal.
(*c*) ——.	Block is clear.	Proceed.	Clear-signal.

Where the semaphore is used, the governing arm is displayed to the right of the signal mast as seen from an approaching train, and the indications are given by positions:

Horizontal as the equivalent of (*a*).

---

* When Distant Block Signals are used the following should be added to Rule 501:

DISTANT BLOCK SIGNALS.

SIGNAL.	OCCASION FOR USE.	INDICATION.	NAME.
Color.	The signal will appear when	For enginemen and trainmen.	As used in rules.
(*d*) ——.	Home signal is at (*a*) or track obstructed between distant and home signal.	Proceed with caution to the home signal.	Caution-signal.
(*e*) ——.	Home signal is at (*c*).	Proceed.	Clear-signal.

Where the semaphore is used, the governing arm is displayed to the right of the signal mast as seen from an approaching train, and the indications are given by positions:

Horizontal as the equivalent of (*d*).

Vertical or Diagonal —— (angle above or below the horizontal) as the equivalent of (*e*).

Where a single disc is used for two indications these are given by position of a —— (color) disc as seen from an approaching train.

Disc displayed as the equivalent of (*d*).

Disc withdrawn as the equivalent of (*e*).

Diagonal ———* as the equivalent of (*b*).
Vertical or Diagonal ———* as the equivalent of (*c*).
Where a single disc is used for two indications these are given by position of a ———† disc as seen from an approaching train:
Disc displayed as the equivalent of (*a*).
Disc withdrawn as the equivalent of (*c*).

502. Block Signals control the use of the blocks, but, unless otherwise provided, do not supersede the superiority of trains; nor dispense with the use or the observance of other signals whenever and wherever they may be required.

503. Block Signals for a track apply only to trains running with the current of traffic on that track.

504. When a train is stopped by a block signal, it may proceed when the signal is cleared. If not immediately cleared, it may proceed—

(A) On single track, preceded by a flagman to the next clear signal;

Or—

(B) On double track at once with caution.

505. When a block signal is out of service the fact will be indicated by ———.

Trains finding a block signal out of service must, unless otherwise directed, proceed with caution to the next block signal.

506. When a train is stopped by a block signal which is evidently out of order, and not so indicated, the fact must be reported to ———.‡

507. Lights must be used upon all block signals from sunset to sunrise, and whenever the signal indications cannot be clearly seen without them.

RULES GOVERNING THE MOVEMENT OF TRAINS WITH THE CURRENT OF TRAFFIC ON DOUBLE TRACK BY MEANS OF BLOCK SIGNALS.§

D-251. On portions of the road so specified on the time-table, trains will run with the current of traffic by block signals whose indications will supersede time-table superiority.

D-252. The movement of trains will be supervised by the ———¶ who will issue instructions to signalmen when required.

D-253. A train having work to do which may detain it more than ——— minutes, must obtain permission from the signalman at the last station at which there is a siding before entering the block in which work is to be done. The signalman must obtain authority to give this permission from the ———.¶

---

* Angle above or below the horizontal.
† Color.
‡ Designated official.
§ Adopted October 28, 1903.
¶ Superintendent or Train Dispatcher.

D-254. Except as affected by these rules, all Block Signal and Train Rules remain in force.

RULES GOVERNING THE MOVEMENT OF TRAINS AGAINST THE CURRENT OF TRAFFIC ON DOUBLE TRACK BY MEANS OF BLOCK SIGNALS.*

NOTE.—Roads operating under these Rules must provide proper signals to control the approach and movement of trains.

D-261. On portions of the road so specified on the time-table, trains will run against the current of traffic by block signals, whose indications will supersede time-table superiority and will take the place of train orders.

D-262. The movement of trains will be supervised by the ———,† who will issue instructions to signalmen.

D-263. A train must not cross over, except as provided in Rule *D*-261, without authority from the ———.‡

D-264. Except as affected by these rules, all Block Signal and Train Rules remain in force.

---

* Adopted April 27, 1904.
† Superintendent or Train Dispatcher.
‡ Train Dispatcher or Signalman.

CHAPTER XXI.

THE STANDARD CODE OF RULES AND REGULATIONS GOVERNING THE MOVEMENT OF TRAINS. (CONTINUED.)

INTERLOCKING RULES — AIR BRAKE AND TRAIN AIR SIGNAL RULES.

INTERLOCKING RULES.*

Definitions.

Interlocking.—An arrangement of switch, lock and signal appliances so interconnected that their movements must succeed each other in a pre-determined order.

Interlocking Plant.—An assemblage of switch, lock and signal appliances, interlocked.

Interlocking Station.—A place from which an interlocking plant is operated.

Fixed Signal.—A signal of fixed location indicating a condition affecting the movement of a train.

Interlocking Signals.—The fixed signals of an interlocking plant.

Home Signal.—A fixed signal at the point at which trains are required to stop when the route is not clear.

Distant Signal.—A fixed signal used in connection with a Home (and Advance) Signal to regulate the approach thereto.

Advance Signal.—A fixed signal used in connection with the home signal, to facilitate the movements within an interlocking plant.

Dwarf Signal.—A low fixed sign

Requisites of Installation.

1. Signals of prescribed form, the indications given by not more than three positions; and, in addition, at night by lights of prescribed color.

---

* As adopted May 19, 1909.

2. The apparatus so constructed that the failure of any part directly controlling a signal will cause it to display the normal indication.

3. Signals, if practicable, either over or upon the right of and adjoining the track to which they refer.*

4. Semaphore arms that govern, displayed to the right of the signal mast as seen from an approaching train.

5. The normal indication of Home Signals—Stop.

6. The interlocking of signals with switches, locks, railroad crossings, or drawbridges, so that a Clear-signal cannot be displayed unless the route to be used is clear and Stop-signals displayed for all conflicting routes.

7. Interlocked levers, or their equivalent, by which switches, locks and signals are operated.

8. The interlocking of switches, locks, railroad crossings, drawbridges and signals through levers, or their equivalent.

9. The apparatus so constructed that the failure of any part directly controlling a switch or lock will prevent the display of a Clear-signal (or a Caution Home or Advance Signal).

10. Facing point locks, or their equivalent, for all switches in main routes.

11. Detector bars, or their equivalent, for all interlocked switches.

12. Pipe, or its equivalent, compensated for changes in temperature, for connecting levers, in mechanical interlocking, with switches and locks.

13. Latch locking, or its equivalent.

14. The established order of interlocking such that:

A Clear or Caution Home Signal cannot be displayed until derails or diverging switches, if any, in conflicting routes are in their normal position, and the switches for the required route are set and locked:

The display of a Clear or Caution Home Signal shall lock all switches and locks in the route as far as the point to which such signal gives permission to proceed, locking all opposing or conflicting signals. The display of a Clear Home Signal shall release the corresponding Distant Signal:

Where Distant Signals are used, the display of a Clear Distant Signal shall lock the Home (and Advance) Signal in the clear position.

15. Interlocking and Block Signals, interconnected, where both are operated from the same station.

---

* Where a road is operated with the current of traffic to the left the interlocking signals may be placed upon the left.

Adjuncts.

The following may be used:

(A) Distant Signals* interlocked with Home (and Advance) Signals; normal indication—Caution.

(B) Advance Signals† interlocked with Distant Signals, if used; normal indication—Stop.

(C) Dwarf Signals; normal indication—Stop.

(D) Bolt locking of switches, or its equivalent, by signal connections.

(E) Derails, or diverging switches, for railroad crossings, drawbridges, junctions, and in sidings connected with the running tracks; normal position—Open.

(F) Electric locking of derails, facing point switches and drawbridges so that they cannot be opened after a train has passed the clear Distant Signal until the train has passed over them.

(G) Detector bars, or their equivalent, at railroad crossings and junctions.

(H) Repeaters, audible or visible, to indicate the position of signals to the signalman operating them.

(J) Annunciators indicating the approach of a train or for other purposes.

(K) Route Indicators.

(L) Torpedo Placers.

(M) Screw Release.

RULES.

General Note.—The Committee has found it desirable to leave blanks (——) in certain rules to be filled by each road adopting them, as may best suit its own requirements.

* When Distant Signals are used the following should be added to Rule 601:

DISTANT SIGNALS.

SIGNAL.	OCCASION FOR USE.	INDICATION.	NAME.
Color.	The signal will be displayed when	For enginemen and trainmen.	As used in rules.
(*d*)——.	Home signal at (*a*).	Proceed with caution to the home signal.	Caution-signal.
(*e*)——.	Home signal at (*c*).	Proceed.	Clear-signal.

Where the semaphore is used, the governing arm is displayed to the right of the signal mast as seen from an approaching train, and the indications are given by positions:

Horizontal as the equivalent of (*d*).

Vertical or Diagonal —— (angle above or below the horizontal) as the equivalent of (*e*).

Rule 611 also should be changed to read, "The normal indication of Home Signals is Stop; of Distant Signals is Caution."

† When Advance Signals are used, that name should be added to the caption of Rule 601 so as read "Home and Advance Signals," and Rule 611 should be changed to read "The normal indication of Home and Advance Signals is Stop."

601. HOME SIGNALS.

SIGNAL.	OCCASION FOR USE.	INDICATION.	NAME.
Color.	The signal will be displayed when	For enginemen and trainmen.	As used in rules.
(*a*) Red.	Route is not clear.	Stop.	Stop-signal.
(*b*) ——.	Route is not clear.	Proceed with caution.	Caution-signal
(*c*) ——.	Route is clear.	Proceed.	Clear-signal.

Where the semaphore is used, the governing arm is displayed to the right of the signal mast as seen from an approaching train, and the indications are given by positions:

Horizontal as the equivalent of (*a*).

Diagonal ———* as the equivalent of (*b*).

Vertical or Diagonal ———* as the equivalent of (*c*).

602. Interlocking signals, unless otherwise provided, do not supersede the superiority of trains; nor dispense with the use or the observance of other signals whenever and wherever they may be required.

Signalmen.

611. The normal indication of Home Signals is Stop.

612. Levers, or other operating appliances, must be used only by those charged with that duty and as directed by the rules.

613. Signal levers must be kept in the position displaying the normal indication, except when signals are to be cleared for an immediate train or engine movement.

614. When the route is clear the signals must be cleared sufficiently in advance of approaching trains to avoid delay.

615. Signals must be restored so as to display the normal indication as soon as the train or engine for which they were cleared has passed ———.†

616. If necessary to change any route for which the signals have been cleared for an approaching train or engine, switches must not be changed or signals cleared for any conflicting route until the train or engine, for which the signals were first cleared, has stopped.

617. A switch, or facing point lock, must not be moved when any portion of a train or an engine is standing on, or closely approaching, the switch or detector bar.

618. Levers must be operated carefully and with a uniform movement. If any irregularity, indicating disarranged connections, is detected in their working, the signals must be restored so as to display the normal indication and the connections examined.

619. During cold weather the levers must be moved as often as may be necessary to keep connections from freezing.

620. If a signal fails to work properly its operation must be discontinued and until repaired the signal secured so as to display the normal indication.

---

* Angle above or below the horizontal.

† A limit to be fixed by each road to suit its conditions.

621. Signalmen must observe, as far as practicable, whether the indications of the signals correspond with the positions of the levers.

622. Signalmen must not make nor permit any unauthorized repairs, alterations or additions to the plant.

623. If there is a derailment or if a switch is run through, or if any damage occurs to the track or interlocking plant, the signals must be restored so as to display the normal indication, and no train or switching movement permitted until all parts of the interlocking plant and track liable to consequent injury have been examined and are known to be in a safe condition.

624. If necessary to disconnect a switch from the interlocking apparatus the switch must be securely fastened.

625. During storms or while snow is drifting special care must be used in operating switches. If the force whose duty it is to keep the switches clear is not on hand promptly when required, the fact must be reported to ———.*

626. When switches or signals are undergoing repairs, signals must not be displayed for any movements which may be affected by such repairs, until it has been ascertained from the repairmen that the switches are properly set for such movements.

627. Signalmen must observe all passing trains and note whether they are complete and in order; should there be any indication of conditions endangering the train, or any other train, the signalman must take such measures for the protection of trains as may be practicable.

628. If a signalman has information that an approaching train has parted he must, if possible, stop trains or engines on conflicting routes, clear the route for the parted train, and give the Train-parted signal to the engineman.

629. Signalmen must have the proper appliances for hand signaling † ready for immediate use. Hand signals must not be used when the proper indication can be displayed by the interlocking signals. When hand signals are necessary they must be given from such a point and in such a way that there can be no misunderstanding on the part of enginemen or trainmen as to the signals, or as to the train or engine for which they are given.

630. If necessary to discontinue the use of any interlocking signal, hand signals must be used and ———* notified.

631. Signalmen will be held responsible for the care of the interlocking station, lamps and supplies; and of the interlocking plant, unless provided for otherwise.

632. Lights within interlocking stations must be so placed that they cannot be seen from approaching trains.

633. Lights must be used upon all interlocking signals from

---

* Designated official.

† Hand signaling includes the use of lamp, flag, torpedo and fusee signals.

sunset to sunrise and whenever the signal indications cannot be clearly seen without them.

634. If a train or engine over runs a Stop-signal, the fact must be reported to ———.*

635. Signalmen must not permit unauthorized persons to enter the interlocking station.

Enginemen and Trainmen.

661. Trains or engines must be run to but not beyond a signal indicating stop, except as provided in Rule 663.

662. If a Clear or Caution-signal, after being accepted, is changed to a Stop-signal before it is reached, the stop must be made at once. Such occurrence must be reported to ———.*

663. Enginemen and trainmen must not proceed on hand signals as against interlocking signals until they are fully informed of the situation and know that they are protected.

Trainmen must not give proceed hand signals which conflict with interlocking signals.

664. The engineman of a train which has parted must sound the whistle signal for Train-parted on approaching an interlocking plant.

665. An engineman receiving a Train-parted signal from a signalman must answer by the whistle signal for Train-parted.

666. When a parted train has been re-coupled the signalman must be notified.

667. Sand must not be used over movable parts of an interlocking plant.

668. Conductors† must report to ———* any unusual detention at interlocking plants.

669. Trains or engines stopped by the signalman in making a movement through an interlocking plant, must not move in either direction until they have received the proper signal from him.

Repairmen.

681. Repairmen are responsible for the inspection, adjustment and proper maintenance of all the interlocking plants assigned to their care.

682. When the condition of switches or track does not admit of the proper operation or maintenance of the interlocking plant, the fact must be reported to ———.*

683. When any part of an interlocking plant is to be repaired a thorough understanding must first be had with the signalman, in order to secure the safe movement of trains and engines during repairs. The signalman must be notified when the repairs are completed.

684. If necessary to disconnect any switch it must be securely fastened before any train or engine is permitted to pass over it.

---

* Designated official.

† Or enginemen of yard engines.

685. Alterations or additions to an interlocking plant must not be made unless authorized by ———.*

AIR BRAKE AND TRAIN AIR SIGNAL RULES.

AIR BRAKES.

Definitions.

AIR BRAKE.—An arrangement of train brakes operated by compressed air.

STRAIGHT AIR BRAKE.—An arrangement of air brakes in which compressed air is stored only in a main reservoir on the engine, and the brakes being applied by admitting the compressed air into the brake pipe and brake cylinders, and released by exhausting the brake pipe and brake cylinder pressure to the atmosphere.

PLAIN AUTOMATIC BRAKE.—An arrangement of air brakes in which the compressed air is stored in the reservoirs on the engine, brake pipe and auxiliary reservior on each car, the brakes being applied by reducing the brake pipe pressure and released by restoring that pressure. The parting of the train or the bursting of the air hose or brake pipe will apply the brakes automatically.

QUICK ACTION AUTOMATIC BRAKE.—An arrangement of air brakes in which the functions of the plain automatic brake are supplemented by appliances so designed that a quick reduction of the brake pipe pressure will give a more prompt and full application of the brakes.

HIGH SPEED BRAKE.—A quick action automatic brake so arranged as to permit a high initial brake cylinder pressure, and to then automatically reduce it.

AIR PUMP.—A pump on the engine for compressing the air used in operating the air brakes and train air signals.

PUMP GOVERNOR.—An appliance used to control the air pump when the pressure is attained for which the governor is set.

MAIN RESERVOIR.—A receptacle on the engine for storing the main supply of compressed air.

ENGINEMAN'S BRAKE VALVE.—A valve used to control the admission to and discharge of air from the brake pipe.

DUPLEX AIR GAUGE.—A gauge used to indicate pressures carried in the main reservoir and brake pipe.

BRAKE PIPE.—The pipes, hose, couplings, angle and stop cocks for distributing compressed air to auxiliary reservoirs and throughout the train.

AUXILIARY RESERVOIR.—A receptacle used on each car or tender for storing compressed air.

BRAKE CYLINDER.—A cylinder, with piston, piston rod and connections, etc., into which compressed air is admitted to apply the brakes.

TRIPLE VALVE.—An appliance used on each engine and car for regulating the distribution of compressed air between the brake pipe, auxiliary reservoir, brake cylinder and the atmosphere.

---

* Designated official.

CUT-OUT COCK.—An appliance used for cutting out the air brake on any car or engine.

DOUBLE HEADING COCK.—An appliance on the engine for use when double heading.

RELEASE VALVE.—An appliance for bleeding the auxiliary reservoir.

PRESSURE RETAINING VALVE.—A valve designed to retain a portion of the pressure in the brake cylinders while the auxiliary reservoir is being recharged.

REVERSING COCK.—An appliance on the engine used to regulate the different air pressures required in the brake pipe for quick action, automatic or high speed brakes.

AUTOMATIC SLACK ADJUSTER.—An appliance for automatically regulating the brake cylinder piston travel.

CONDUCTOR'S VALVE.—A valve by which the air brakes can be applied from a car.

SERVICE APPLICATION.—The application of the air brakes as ordinarily made in reducing speed or stopping the train.

EMERGENCY APPLICATION.—The application of the air brakes as made when it is desired to stop the train in the shortest possible distance.

TRAIN AIR SIGNALS.

Definitions.

AIR SIGNAL.—An appliance used on passenger trains by which signals are given to enginemen from any part of the train.

SIGNAL PIPE.—The pipe, hose, couplings and stop cocks, for distributing compressed air throughout the train.

REDUCING VALVE.—A valve which regulates the signal pipe pressure.

CAR DISCHARGE VALVE.—A valve by which signal pipe pressure reductions are made to operate the whistle signal valve.

WHISTLE SIGNAL VALVE.—A valve which responds to signal pipe pressure reductions and regulates blasts of the air whistle.

AIR WHISTLE.—A whistle on the engine through which signals are conveyed from the cars to the engineman.

AIR BRAKES

*Requisites of Installation.**

1. The apparatus so constructed that all air brakes of a train can be operated by the engineman.
2. The apparatus so constructed that all cars equipped with automatic air brakes can be operated together.
3. The apparatus so constructed that if the train should part it will cause the application of the air brakes.

---

* As the straight air brake is now rarely used except on engines these requisites apply to the various automatic brakes.

4. The apparatus so constructed that a failure of the brake pipe will immediately be indicated to the engineman.
5. A release valve on each car.
6. A conductor's valve on each passenger car.
7. A cut-out cock on each car.

Adjuncts.

The following may be used:
(A) Pressure Retaining Valve.
(B) Automatic Slack Adjuster.
(C) Back-up Hose.
(D) Warning Whistle for Back-up Hose.

TRAIN AIR SIGNALS.

Requisites of Installation.

1. The apparatus so constructed that all cars equipped with train air signals can be operated together.
2. The apparatus so constructed that the parting of the train will cause it to give an indication to the engineman.
3. A car discharge valve on each car equipped with train air signals.

RULES.

General.

1001. In passenger trains all cars must be equipped with air brakes and train air signals, which must be coupled and connected with the engine.

1002. In freight trains at least ———* per cent. of the total number of cars must be equipped with air brakes, which must be coupled and connected with the engine.

1003. When an engine has been coupled to a train and before leaving the initial point of its run, all air brakes which are connected must be tested by a service application and the brakes released only when the proper signal is given. This test must be repeated whenever the air connections have been separated, except when switching in yards. On trains equipped with air signals, the release signal must be given from the rear car.

1004. A passenger train must not leave a terminal or division point with brakes upon any car cut out or in defective condition, without permission of the ———.

1005. When back-up hose is used, its connection must be tested by making reduction of brake-pipe pressure before train is moved.

A passenger train should not be backed any considerable distance without suitable back-up hose, or its equivalent, and a trainman on the rear platform.

Enginemen.

1011. When taking charge of an engine, the engineman must see that the air brake and train air signal apparatus on the

* This blank to be filled in by each road in accordance with its requirement.

engine and tender is in good order, and at the end of the run must inspect the apparatus and report any defects.

1012. When double-heading, the engineman of the leading engine should operate the brakes; but this will not apply to helping engines coupled to the head of the train.

1013. When retaining valves are to be used, understanding must be had between the engineman and trainmen as to the number to be used.

1014. Should the air brakes become ineffective, the engineman must notify the conductor at once and the use of hand brakes must be arranged for.

1015. Should the air brakes be applied suddenly, from any unknown cause, steam must be shut off at once and the brake-valve handle placed in the lap position.

Trainmen.

1051. When making up a train, all hose connections must be coupled and all angle cocks opened except the one on the rear of the last car on which the air brake is to be used.

The release cocks on the auxiliary reservoirs must be closed, the handles of the pressure-retaining valve set properly, the cars cut in and the hand brakes released before air brakes are tested.

1052. When a test application of the air brakes is made, trainmen must see that they are all set properly; must give the proper signal for releasing the brakes and see that they are all released.

1053. An air brake which cannot be made effective must be cut out, and the engineman notified.

1054. When uncoupling hose connections, both angle cocks must be closed and hose uncoupled by hand.

1055. Air brakes must not be depended upon to hold a train or car when the engine is detached. Hand brakes must be used for that purpose.

1056. Should an engineman of a passenger train whistle for brakes, a conductor's valve must be opened quickly, kept open until the train is stopped and then closed. If no air escapes when the valve is opened, hand brakes must be applied.

1057. On the failure of the air brake apparatus, an understanding must be had with the engineman, and the use of hand brakes arranged for.

1058. Failure of the air brakes, requiring the use of hand brakes, must be reported by the conductor to the ——— from the first telegraph station.

1059. Trainmen must report to the ——— all defects found in the air brakes, brake connections or train air signal apparatus.

1060. When retaining valves are to be used understanding must be had between the engineman and trainmen as to the number to be used.

Engine-House Foreman.

1101. Engine-house foremen must have engine and tender air brake and air signal apparatus inspected and required repairs made before each trip.

Inspectors.

1121. When making up a train, all hose connections must be coupled and all angle cocks opened, except the one on the rear of the last car on which the air brake is to be used.

The release cocks on the auxiliary reservoirs must be closed, the handle of the pressure-retaining valve set properly, the cars cut in and the hand brakes released before air brakes are tested.

1122. When a test application of the air brakes is made, the inspector must see that they are all set properly. He must give the proper signal for releasing the brakes and see that they are all released.

1123. An air brake which cannot be made effective must be cut out, and the engineman notified.

1124. Inspectors must report to the ——— all defects found in the air brakes, brake connections or train air signal apparatus which cannot be repaired at the time.

1125. Inspectors must inform the conductor and engineman when the tests are completed.

INDEX.

Accidents 108, 131, 147
" Causes of 118
" Prevention of 37
Adlake System, Lighting Cars..... 220
Agents' and Operators' Examination..... 475
Air Brake 136
" and Train Air Signal Rules..... 592
Air Whistle, a Safety Device..... 136
Application for Employment — Form..... 74
Automatic Brake, a Safety Device..... 135
" Coupler, a Safety Device..... 138
" Safety Appliances 138

Baggagemen, Rules and Regulations Governing..... 382
" Examination 483
Baker Steam Attachment, Heating Cars..... 202
" System, Heating Cars..... 201
Block Signal Rules..... 564
" " " Governing the Movement of Trains Against the Current of Traffic on Double Track 585
" " " Governing the Movement of Trains With the Current of Traffic on Double Track 584
Block Signaling 340
" " Automatic 582
" " Controlled Manual 573
" " Manual 565
" Systems 137, 564
Bounties 23, 26
Brakemen, Duties of..... 53
" Freight, Rules and Regulations Governing..... 388
Brakemen's and Baggagemen's Examination..... 483
By-Pass Valve, Economy Heating System..... 190

Cars, Care of 79
" Heating, See *"Heating Cars"*..... 152
" Lighting, See *"Lighting Cars"*..... 216
" Passenger, Strengthening 142
" Switching and Marshalling..... 106
Clearance Card 548
Coal, Combustion of..... 40

Color Blindness 57
" " Causes 57
" " Detection of 65
" " Tests 58
Combustion 40, 44
Commercial System, Lighting Cars..... 223
Commingler System, Heating Cars..... 200
Conductors, Duties of..... 50
" Examination 393
" Freight, Rules and Regulations Governing..... 384
" Passenger, Rules and Regulations Governing..... 379

De Laval Electric System, Lighting Cars..... 229

Economy System, Heating Cars..... 184
Electric Systems, Lighting Cars..... 226
Employes, Legislation Affecting..... 117
Engineers, Duties of..... 32
" Examination for 422
Enginehouse Foremen, Rules and Regulations..... 389
Examination, Applicants' 27
Examinations, Educational 73
" Physical 67
" (Questions and Answers) for Conductors, Enginemen, Firemen, Signalmen at Interlocking Plants, Train Dispatchers, Agents and Operators, Brakemen and Baggagemen and Track, Bridge and Building Foremen..... 391

Fines 30
Firemen, Duties of..... 41, 49
" Examination for 449
" Importance of 39
First Aid to Injured..... 126
Freight and Passenger Business, Difference Between..... 16
Fuel, Expense of..... 43

Gas Systems, Lighting Cars..... 217
Gold's Combination Pressure and Vapor System..... 172
" Duplex System, Heating Cars..... 200
" Improved Direct System, Steam..... 168
" " Heating Apparatus for Locomotives..... 160
" " Storage System for Heating Compartment Cars, Steam 169
" " System of Hot Water Circulation..... 195

Heating Cars 152
" " (Illustrations) 162, 163, 164, 166, 167, 171, 173, 175, 176, 178, 179, 183, 187, 193, 194, 197, 198, 199

Heating Cars, Baker System 201
" " Commingler System 200
" " Directions for Cleaning Apparatus..... 205
" " " " Regulating 204
" " Economy System 184
" " Electricity 160
" " Gold's Systems 160-200
" " Heaters with Train Pipe..... 202
" " Hot Air System..... 159
" " Hot Water Systems.....157, 158, 180
" " In Early Days..... 153
" " In Great Britain..... 154
" " Low Pressure System..... 158
" " Questions and Answers..... 207
" " Requisites of 152
" " Steam 156, 168
" " Stoves 154
" " Straight Steam 202
" " Vacuum System 157
" " Vapor System 170
Holmgren Test, For Color Blindness..... 69
Hygiene 79

Inspectors' and Foremen's Duties — Questions and Answers, Lighting Cars 249
Interlocking 133, 318, 337
" Operation 321
" Rules Governing 586
" Switch, a Safety Device..... 132

Legislation, Affecting Operation of Trains..... 115
" " Train Employes 115
" " Transportation of Explosives..... 118
Lighting Cars 216
" " (Illustrations) 217, 232, 235, 236, 237, 239, 240, 244, 245, 247, 248, 250, 252, 253, 255, 257, 258, 259
" " Adlake Acetylene Gas System..... 220
" " Axle Electric System..... 226
" " Commercial Acetylene Gas System..... 223
" " De Laval Electric System..... 229
" " In Early Days..... 216
" " Questions and Answers..... 231
" " Requisites of 216
Line Repairers, Rules and Regulations Governing..... 378

Miller Platform and Automatic Coupler..... 141
" " " " " (*Illustration*) 140
Morale of the Service..... 12

Operating Trains—See "*Trains, Operating.*"

Passenger and Freight Business, Difference Between..... 16
" Conductors, Rules and Regulations Governing..... 379
" Trainmen, Rules and Regulations Governing..... 382
Phraseology, Train 355
Physical and Educational Requirements of the Train Service. 56
" Examinations 67
" " Aural 71
" " Visual 67
Pintsch Gas System, Lighting Cars..... 217
Pressure Gauge, Baker Heating System..... 204
" Regulator, Economy Heating System..... 185
Prizes 23
Promotion 12

Questions and Answers, Agents..... 475
" " " Baggagemen 483
" " " Brakemen 483
" " " Bridge and Building Foremen..... 493
" " " Conductors 393
" " " Enginemen 422
" " " Firemen 449
" " " Heating Cars 207
" " " Lighting Cars 231
" " " " " Inspectors' and Foremen's Duties..... 249
" " " Operators 475
" " " Signalmen 452
" " " Train Dispatchers 456
" " " Track Foremen 493

Regulating Valve, Automatic Vapor, Gold's Heating System.. 174
Regulator, Pressure, Gold's Improved Balance Valve..... 161
Relief Valve, Economy Heating System.....185, 189
Rewards 24
Rules and Regulations, Accidents..... 125
" " " Air Brake and Train Air Signals..... 592
" " " Automatic Block System..... 582
" " " Baggagemen 382
" " " Block Signals 564
" " " " " Double Track Against Current of Traffic... 585
" " " " " Double Track With Current of Traffic..... 584
" " " Controlled Manual Block System..... 573
" " " Double Tracks 525
" " " Four Tracks 549
" " " General 366

Rules and Regulations, Growth and Value of..... 343
" " " Interlocking 586
" " " Manual Block System..... 565
" " " Movement of Trains by Telephone... 498
" " " Obedience to 347
" " " Physical and Educational Qualifications 66
" " " Signal Repairmen 390
" " " Single Track 504
" " " Telegraph and Telephone Operators.. 376
" " " Telegraph Numerals 378
" " " Three Tracks 549
" " " Tools for Coaches..... 382
" " " Train Orders, Double Track..... 533
" " " " " Single Track 514
" " " Signal Repairmen 390
" " " Single Track 504

Safety Appliances, Air Whistle..... 136
" " Automatic Brake 135
" " " Car Coupler 138
" " Block System 137
" " Blocks of Wood 141
" " Interlocking Switch 132
" " Miller Platform and Automatic Coupler 140, 141
" " Practical Use of..... 129
" " Split Switch 135
" " Tools 141
Safety Plate and Gas Preventer Combined..... 203
Signal Repairmen, Rules and Regulations..... 390
Signaling, Automatic Block 287, 307, 315, 330
" " " Different Systems of..... 311
" Controlled Manual 299, 303
" Double Track 326
" Early 271
" In England 270
" Principal Purposes of..... 276
" Staff System 303
" Three-Position 287
" Track Circuit 299
" Two-Position 285
" Uniformity 269
Signalmen's Examination, Interlocking Plant 452
Signals 268
" (*Illustrations*) See also "*Signals, Train*".....338, 339, 340, 341, 342
" American Railway Association..... 285
" Audible 280, 508

Signals, Automatic Block 340
" " Stop 332
" Different Kinds 277
" Distinguishing Marks 313
" Economic Value of 321
" Employes' Duties 276
" Fixed 281
" " Classification of 292
" Hand, Flag and Lamp (*Illustrations*) 550, 551
" Interlocking 318, 337
" Night 293
" Operation 295
" Principal Manner of Indication..... 316
" Proper Location of..... 327
" Semaphore 281, 283
" " Indications of 288
" Space Interval System..... 296
" Station 329
" Supervision of, Rules and Regulations Governing..... 389
" "Surprise Tests" 331
" Switch Targets 282
" Telegraph 295
" Telephone 296
" Track 334
" Train (*Illustrations*) See also "*Signals*"..552, 553, 554, 555, 556, 557, 558, 559, 560, 561, 562, 562a, 562b, 563
" Visible 507
" Whistling Signs 283
Split Switch, a Safety Device..... 135
Staff System, Protecting Trains in Great Britain..... 104
" " Signaling 303
Standard Code of Rules and Regulations Governing the Movement of Trains 501, 564, 586

Telegraph, Movement of Trains by..... 95
" and Telephone Operators, Rules and Regulations.. 376
Telegraphic Dispatches, Methods of..... 95
Telephone, Dispatching Trains by..... 498
" Rules and Regulations in Regard to Movement of Trains 498
Testing for Color Blindness..... 58
" " " " Holmgren Test 69
Time Table Chart.....83, 87
" " Preparation of 90
Tools 141
" Additional in Winter..... 382
" Baggage Car 382
" Coach 382
Track, Bridge and Building Foremen's Examination..... 493

Train Baggagemen, Rules and Regulations Governing..... 382
" Dispatcher, Duties of..... 101
" " Examination for 456
" Force, The 32
Trainmen, Hours for Working..... 19
" Qualifications of 13
" Rules and Regulations Governing..... 382
" Uniforms of..... 19
Train Orders, Double Track Rules..... 533
" " D-Form E, Time Orders..... 538
" " D-Form F, for Sections..... 539
" " D-Form H, Work Extra..... 541
" " D-Form M, Annulling Part of an Order..... 542
" " D-Form P, Superseding an Order or a Part of an Order 542
" " D-Form R, Providing for a Movement Against the Current of Traffic..... 543
" " D-Form S, Providing for the Use of a Section of Double Track as Single Track. 543
" " Form A, Fixing Meeting Points for Opposing Trains 518, 537
" " Form B, Directing a Train to Pass Ahead of Another Train 519, 537
" " Form C, Giving Right to a Train Over an Opposing Train 519, 538
" " Form D, Giving Regular Trains the Right Over a Given Train.....520, 538
" " Form F, for Sections..... 521
" " Form G, Extra Trains.....522, 540
" " Form H, Work Extra..... 523
" " Form J, Holding Order.....524, 541
" " Form K, Annulling a Schedule or a Section.524, 542
" " Form L, Annulling an Order.....524, 542
" " Form M, Annulling Part of an Order..... 524
" " Form P, Superseding an Order or a Part of an Order 525
" " Form 19 .....546, 547
" " Form 31 .....544, 545
" " Single Track Rules..... 514
" Phraseology 355
" Rules, Double Track..... 525
" " General Notice 502
" " Growth and Value of..... 343
" " Form of Order..... 502
" " Obedience to 347
" " Single Track 504
" " Three and Four Tracks..... 549